THIS DRAWING AND THE INFORMATION CONTAINED WITHIN IT ARE CONFIDENTIAL AND MAY NOT BE COPIED OR DISCLOSED WITHOUT THE WRITTEN PERMISSION OF LITTELFUSE.

REVISIONS				
ZONE	REV.	DESCRIPTION	DATE	APPROVED
	A	GCF#524673 INITIAL RELEASE	OCT/21/2021	D. ZHANG

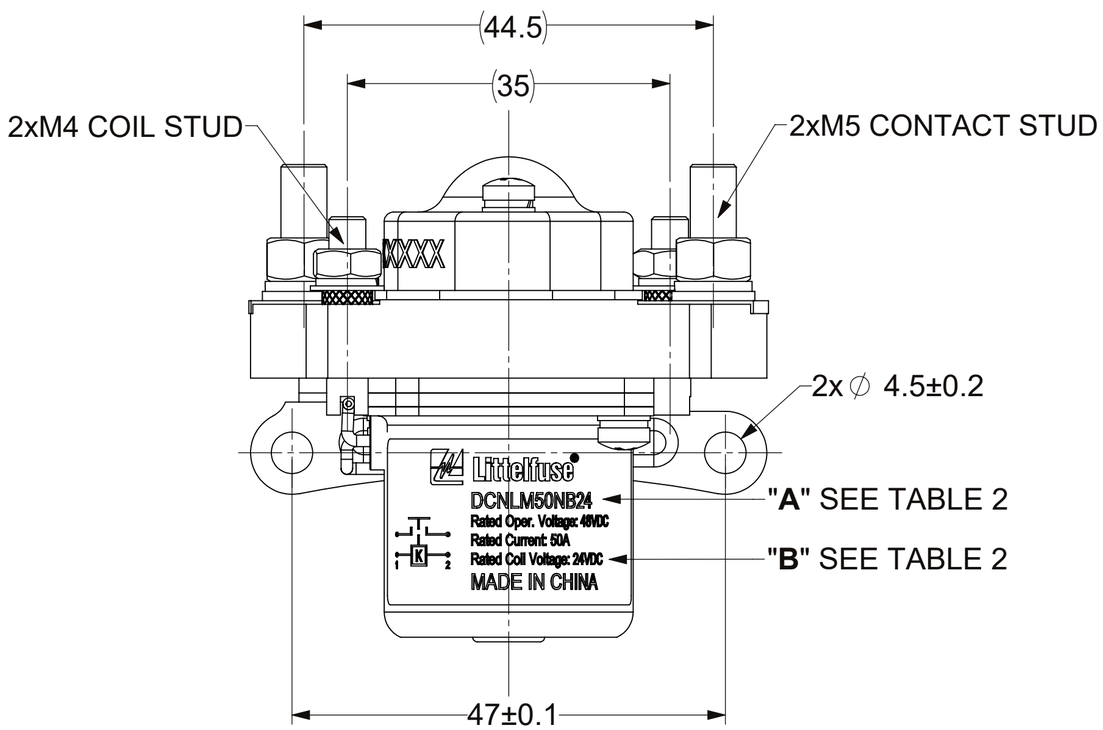

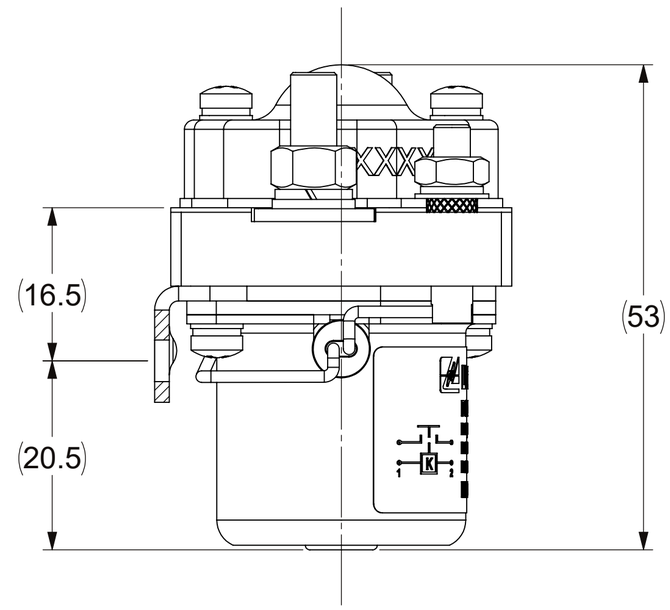

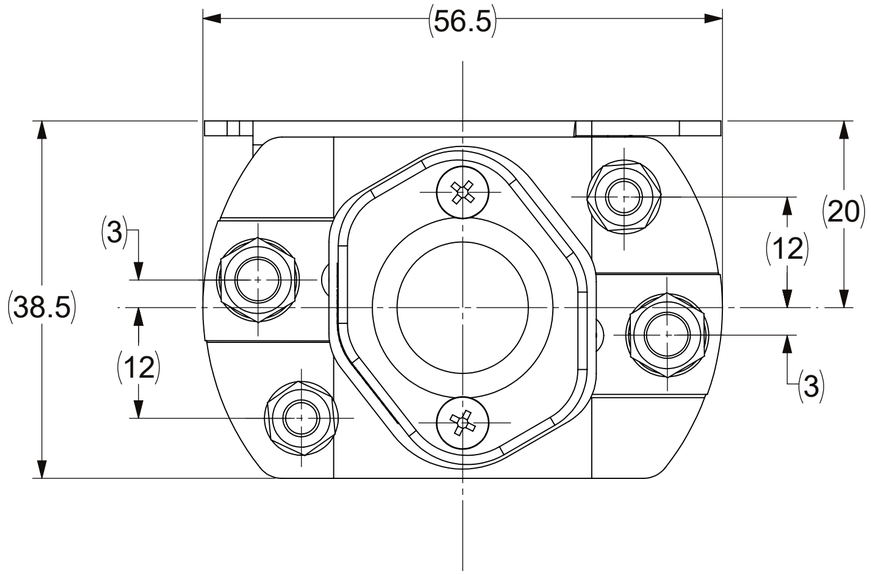

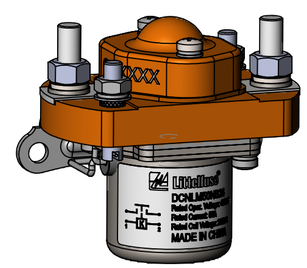

CIRCUIT SCHEMATIC DIAGRAM

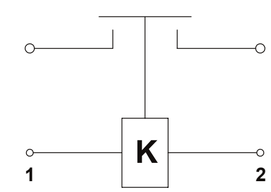

NOTES:
1. ALL SIZES ARE FOR REFERENCE ONLY.
2. MATERIALS AND FINISH:
2.1 BASE: THERMOSETTING PLASTIC, UL94V-0.
2.2 CONTACTS: SILVER ALLOY.
2.3 COIL STUD: COPPER ALLY, SILVER PLATED.
3. PRODUCT TECHNICAL PARAMETERS: SEE TABLE 1.
4. PRODUCT AND NAMEPLATE(THE CHARACTER CONTENT AT "A" AND "B") CONFIGURATION SEE TABLE 2.
5. CONTACT ARRANGEMENT: SPST-NO.
6. CONNECTION STUD: M5 STUD, RECOMMENDED TORQUE 4 N•m ~ 5 N•m; M4 STUD, RECOMMENDED TORQUE 1.7 N•m ~ 2.5 N•m.
7. MOUNTING: M4 BOLT, RECOMMENDED TORQUE 1.7 N•m ~ 2.5 N•m.

TABLE 1: TECHNICAL PARAMETERS

ITEM		PARAMETER			
		DCNLM50NB12	DCNLM50NB24	DCNLM50NB48	DCNLM50NB60
RATED COIL VOLTAGE		12V DC	24V DC	48V DC	60V DC
HOLD POWER		MAX 9W	MAX 9W	MAX 9W	MAX 8W
OPERATING VOLTAGE IN COLD STATE AT (20±5)°C	PICK UP	MAX 8.4V DC	MAX 16.8V DC	MAX 33.6V DC	MAX 42V DC
	RELEASE	MIN 1.2V DC	MIN 2.4 V DC	MIN 4.8 V DC	MIN 6V DC
OPERATE TIME		MAX 40ms			
RELEASE TIME		MAX 20ms			
BOUNCE TIME		MAX 7ms			
RATED CONTACT VOLTAGE		48V DC			
MAXIMUM CONTACT VOLTAGE		60V DC			
RATED CONTACT CURRENT		50A			
CONTACT VOLTAGE DROP		≤50mV@50 A			
LIMIT BREAKING ABILITY		4Ie/5ms,1CYCLES			
DIELECTRIC STRENGTH		1000V AC, 50Hz,1min., LEAKAGE CURRENT ≤1 mA			
INSULATION RESISTANCE		≥50MΩ@500VDC			
ELECTRIC LIFE		6000 CYCLES			
MECHANICAL LIFE		100,000 CYCLES			
WORKING DUTY		CONTINUOUS			

TABLE 2: CONFIGURATION OF CHARACTER CONTENT

PRODUCT PN	"A"	"B"
DCNLM50NB12	DCNLM50NB12	Rated Coil Voltage: 12VDC
DCNLM50NB24	DCNLM50NB24	Rated Coil Voltage: 24VDC
DCNLM50NB48	DCNLM50NB48	Rated Coil Voltage: 48VDC
DCNLM50NB60	DCNLM50NB60	Rated Coil Voltage: 60VDC

DIMENSIONS ARE SHOWN IN MILLIMETERS. DIMENSIONS AND TOLERANCES ARE DEFINED ACCORDING TO ANSI/ASME Y14.5-1994.

PER CHI-NPD20-008 PROCEDURE

●	FIT/ FUNCTION CRITICAL CHARACTERISTICS
<S>	SAFETY/ COMPLIANCE CRITICAL CHARACTERISTICS SYMBOL
CPK	DENOTES CPK DIMENSIONS MINIMUM CPK VALUE
(ST)	DENOTES A CHARACTERISTIC THAT PROVIDES AN INDICATION OF PROCESS PERFORMANCE.PROCEDURE FOR MEASUREMENTAND TRACKINGTO BE DEFINED IN LITTELFUSE INSPECTION INSTRUCTIONS
CP	DENOTES CP DIMENSIONS, -MINIMUM CP VALUE MUST BE WITHIN THE DIMENSIONAL LIMITATIONS SHOWN ON DRAWING AND INITIALLY LOCATED TO ALLOW FOR MAXIMUM TOOL LIFE

	NAME	DATE
DRAWN	B. WU	OCT/20/2021
CHECKED	J. LI	OCT/20/2021
	-	-
	-	-

FORM NO: CVP-PE40-0005 REV B

THIRD ANGLE PROJECTION

DO NOT SCALE DRAWING

Littelfuse
Expertise Applied | Answers Delivered

TITLE
DCNL 50A 48V CONTACTOR

SIZE C | DWG. NO. OUTLINE | OL-DCNLM50NB, CHT | REV. A

SCALE 2:1 | SHEET 1 OF 1