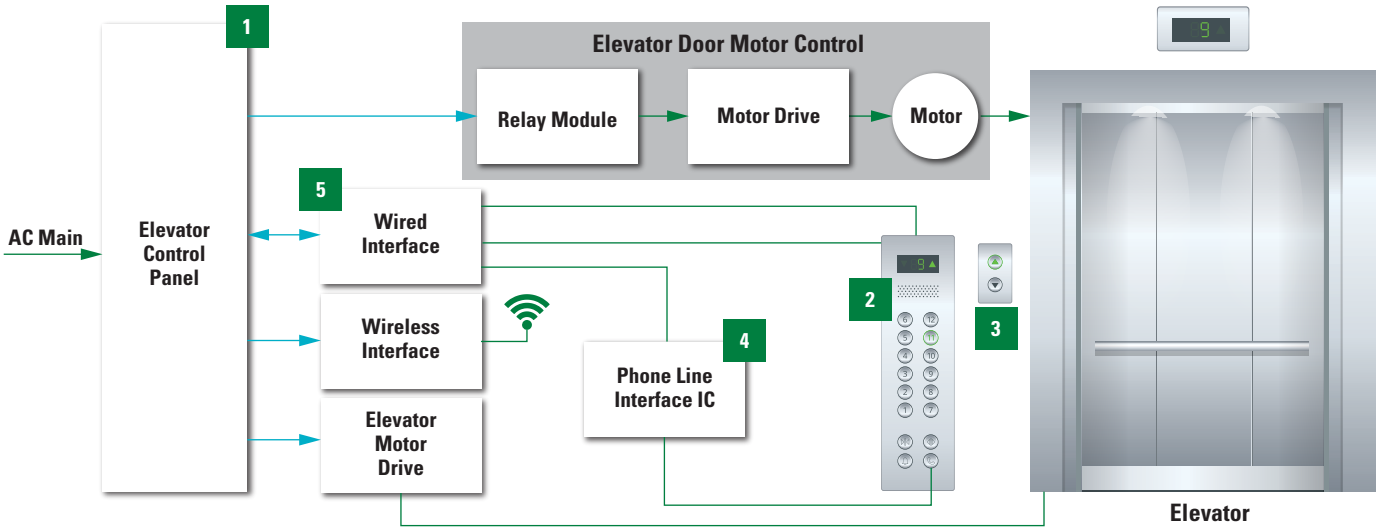
1
Elevator Door Motor Control
Relay Module
Motor Drive
Motor
9
AC Main
Elevator
Control
Panel
5
Wired
Interface
Wireless
Interface
Elevator
Motor
Drive
Phone Line
Interface IC
4
2
3
Elevator