THIS DRAWING AND THE INFORMATION CONTAINED WITHIN IT ARE CONFIDENTIAL AND MAY NOT BE COPIED OR DISCLOSED WITHOUT THE WRITTEN PERMISSION OF LITTELFUSE.

REVISIONS				
ZONE	REV.	DESCRIPTION	DATE	APPROVED
	A	RELEASE TO PRODUCTION. PCO 500000300267. DAK	8/31/2023	DSILVA
B5	B	ADDED NOTES 11 AND 12 ECR-102013. DAK	7/19/2024	E. FLORES

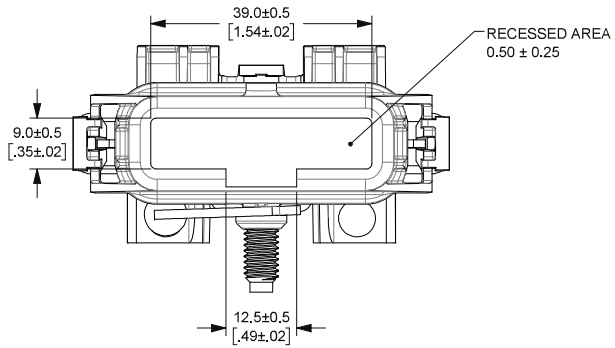

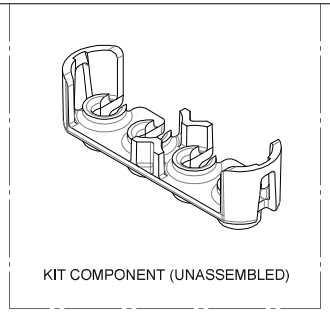

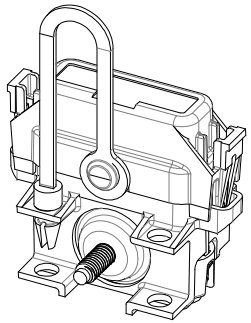

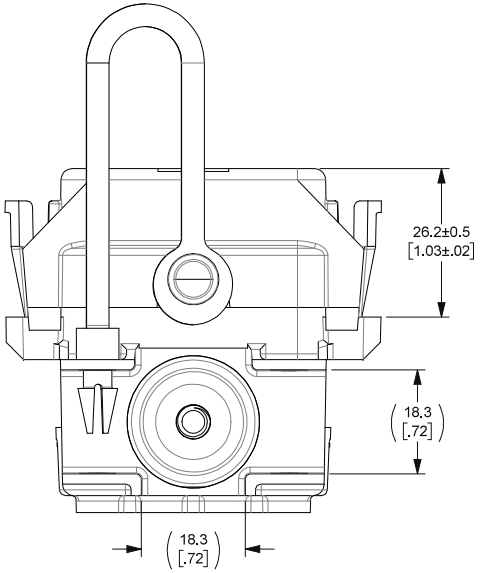

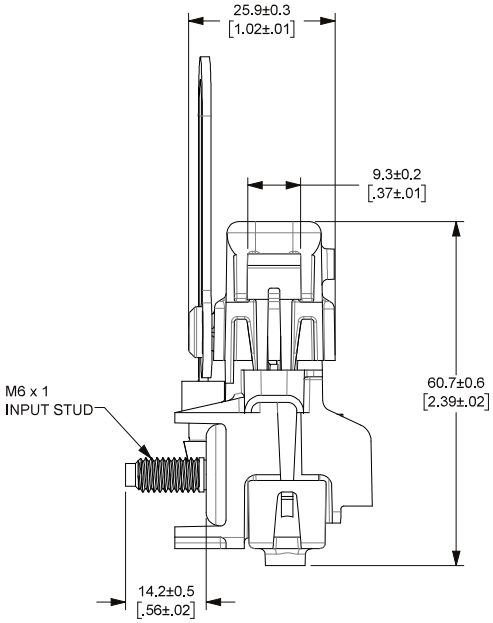

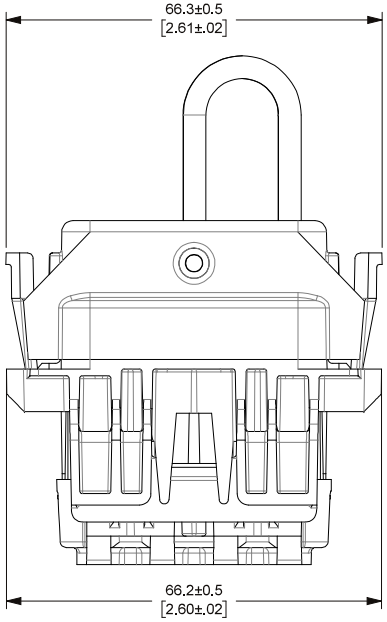

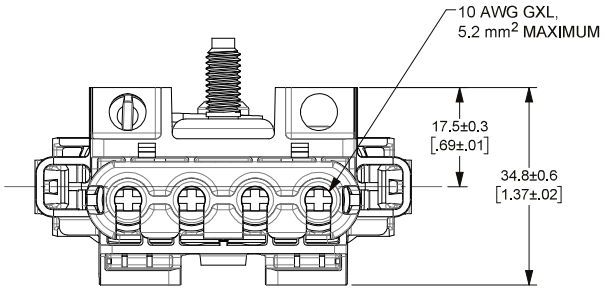

NOTES: (UNLESS OTHERWISE SPECIFIED)
1. COVER AND HOUSING MATERIAL: 25% GLASS REINFORCED NYLON 66
2. INPUT STUD MATERIAL: ZINC PLATED STEEL
3. BUSBAR MATERIAL: TIN OVER NICKEL PLATED COPPER
4. FUSE HOLDER DESIGNED FOR USE WITH LITTELFUSE SLOTTED MCASE FUSE CARTRIDGES, NOT INCLUDED.
5. CONTINUOUS CURRENT MAY NOT EXCEED 126 AMPS TOTAL OR 180 AMPS FUSE RATING TOTAL.
6. TPA IS NOT ASSEMBLED BUT PACKAGED AS A KIT WITH THE FUSE HOLDER.
7. INPUT NUT TORQUE: 5-7 Nm (44-62 in-lbs)
8. FUSE HOLDER DESIGNED FOR USE WITH TE AMP 6.3 (5.8 x 0.8) SEALED MALE TERMINALS.
9. APPROXIMATE MASS OF FUSE HOLDER: 65 g
10. OUTPUT WIRE CONNECTIONS ARE TO BE MADE WITH TE AMP MALE CONTACTS (5.8 x 0.8) AS SHOWN IN THE TABLE BELOW, NOT INCLUDED.
11. DEGREE OF PROTECTION: IP67
12. (B) FLAMMABILITY RATING: V-0

I/O CONNECTION	DESCRIPTION, TE PART NUMBER
BUS INPUT STUD	M6 x 1mm
OUTPUT TERMINATION (NOT SUPPLIED)	TE AMP MALE CONTACT (5.8 x 0.8)
6 mm² WIRE	2-2112966-2
WIRE SEAL	1719043-1
2.5 - 4 mm² WIRE	1-962919-2
WIRE SEAL	1394512-1
1 - 2.5 mm² WIRE	1-962918-2
WIRE SEAL	2177018-1
CAVITY PLUG (NOT SUPPLIED)	967652-1

FUSE HOLDER SCHEMATIC

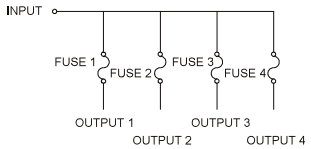

DIMENSIONS ARE SHOWN IN MILLIMETERS. DIMENSIONS AND TOLERANCES ARE DEFINED ACCORDING TO ANSI/ASME Y14.5-1994.

PER CHA-NPC03-008 PROCEDURE

●	FIT/ FUNCTION CRITICAL CHARACTERISTICS
<S>	SAFETY/ COMPLIANCE CRITICAL CHARACTERISTICS SYMBOL
CPK	DENOTES CPK DIMENSIONS MINIMUM CPK VALUE
(ST)	DENOTES A CHARACTERISTIC THAT PROVIDES AN INDICATION OF PROCESS PERFORMANCE,PROCEDURE FOR MEASUREMENTAND TRACKINGTO BE DEFINED IN LITTELFUSE INSPECTION INSTRUCTIONS
CP	DENOTES CP DIMENSIONS, -MINIMUM CP VALUE MUST BE WITHIN THE DIMENSIONAL LIMITATIONS SHOWN ON DRAWING AND INITIALLY LOCATED TO ALLOW FOR MAXIMUM TOOL LIFE

	NAME	DATE
DRAWN	D. KOTOWSKI	2023/02/13
CHECKED	DSILVA	2023/07/21
	-	-
	-	-

FORM NO: CVI-PE40-0005 REV B

THIRD ANGLE PROJECTION

DO NOT SCALE DRAWING

Littelfuse®
Expertise Applied | Answers Delivered

TITLE
FUSE HOLDER, 4-WAY MCASE

SIZE	DWG. NO.	REV.
C	OUTLINE OL-FHMC0001	B

SCALE 3:2 SHEET 1 OF 1