# IXBOD2-XXR/ IXBOD2-XXRD

## Breakover Diode Module

RoHS

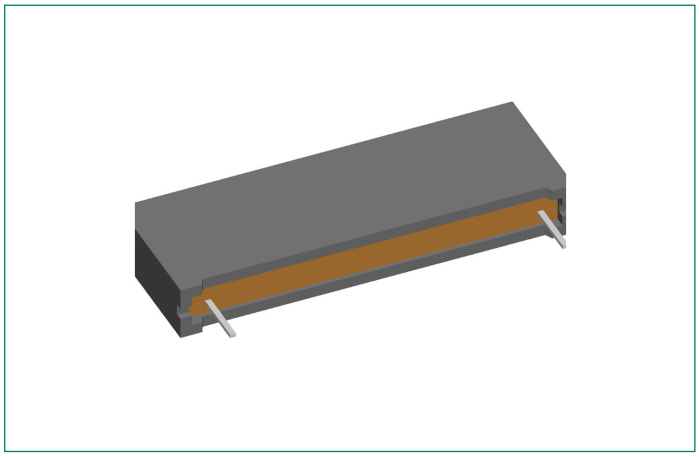

## Features

- Extra fast turn-on
- Very low temperature dependence
- Very low leakage current

## Applications

- High voltage circuit protection
- Transient voltage protection
- Trigger device
- Power pulse generators
- Energy discharge circuits
- Lightning and arcing protection
- Battery overvoltage protection
- Solar array protection

## Pinout Diagram

Version R

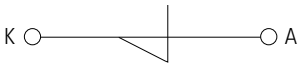


Version RD

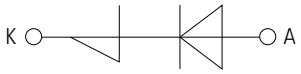


**A:** Anode; **K:** Cathode

## Package

- Industry standard outline
- RoHS compliant
- Epoxy meets UL 94V-0
- Reduced weight
- Soldering pins for PCB mounting
- Base plate: Plastic overmolded tab

## Product Summary

| Number of BODs | IXBOD-XXR | IXBOD-XXRD |
|---|---|---|
| 1-2 | IXBOD2-12R - IXBOD2-20R | IXBOD2-11RD - IXBOD2-20RD |
| 3 | IXBOD2-21R - IXBOD2-32R | IXBOD2-21RD - IXBOD2-36RD |
| 4 | IXBOD2-33R - IXBOD2-42R | - |



© 2026 Littelfuse, Inc.
Specifications are subject to change without notice.
Revised: AO.08/19/2026

## IXBOD2 Electrical Characteristics

| Symbol | Characteristics | Conditions | | Value | | | Units |
|---|---|---|---|---|---|---|---|
| | | | | Min. | Typ. | Max. | |
| $I_D$ | Off-state Current | $V_D = 0.8 \cdot V_{BO}$ | $T_{vj}$ = 125 °C | – | – | 200 | µA |
| $K_T$ | Temperature Coefficient of $V_{BO}$ | – | | – | – | $1 \cdot 10^{-3}$ | $K^{-1}$ |
| $I_{BO}$ | Breakover Current | $T_{vj}$ = 25 °C | | – | – | 20 | mA |
| $I_H$ | Holding Current | $T_{vj}$ = 25 °C | | – | – | 40 | mA |
| | | $T_{vj}$ = 125 °C | | – | – | 20 | mA |
| $dv/dt_{(cr)}$ | Critical Rate of Rise of Off-state Voltage | $V_D = 0.9 \cdot V_{BO}$ | $T_{vj}$ = 25 °C | – | – | 3000 | V/µs |
| $di/dt_{(cr)}$ | Critical Rate of Rise of On-state Current | $I_T$ = 80 A; $V_D = V_{BO}$; f = 50 Hz | $T_{vj}$ = 125 °C | – | – | 150 | A/µs |
| $t_q$ | Turn-off Time | $V_D = 0.75 \cdot V_{BO}$; $V_R$ = 0 V; $I_T$= 100 A; $T_{vj}$ = 125 °C | | – | 200 | – | µs |

## IXBOD2-12R...20R

| Symbol | Characteristics | Conditions | | IXBOD2 Variant | Value | | | Units |
|---|---|---|---|---|---|---|---|---|
| | | | | | Min. | Typ. | Max. | |
| $V_{BO}$ | Breakover Voltage | $V_{BO}(T_{vj}) = V_{BO}$, 25 °C · [1 + $K_T$ ($T_{vj}$ - 25 °C)] | | IXBOD2-12R | 1150 | 1200 | 1250 | V |
| | | | | IXBOD2-14R | 1350 | 1400 | 1450 | |
| | | | | IXBOD2-15R | 1450 | 1500 | 1550 | |
| | | | | IXBOD2-16R | 1550 | 1600 | 1650 | |
| | | | | IXBOD2-17R | 1650 | 1700 | 1750 | |
| | | | | IXBOD2-18R | 1750 | 1800 | 1850 | |
| | | | | IXBOD2-19R | 1850 | 1900 | 1950 | |
| | | | | IXBOD2-20R | 1950 | 2000 | 2050 | |
| $I_{RMS}$ | RMS On-state Current | f = 50 Hz $T_{amb}$ = 50 °C pins soldered to printed circuit (conductor 0.035 x 2mm) | | | – | – | 2 | A |
| $I_{T(AVM)}$ | Maximum Average Forward | – | | | – | – | 1.25 | A |
| $I_{FSM}$ | Non-repetitive Peak Forward Surge Current | $t_p$ = 0.1 ms; rectangular, non repetitive, $T_{vj}$ = 50 °C | | | – | – | 200 | A |
| $I^2t$ | $I^2t$ Value | $t_p$ = 0.1 ms; $T_{vj}$ = 50 °C | | | – | – | 4 | $A^2s$ |
| $V_T$ | On-state Voltage | $T_{vj}$ = 125 °C | $I_T$ = 5 A | | – | – | 3.4 | V |
| $V_{TO}$ | Threshold Voltage | for power-loss calculation only | | | – | – | 2.2 | V |
| $r_T$ | Slope Resistance | | | | – | – | 0.24 | Ω |

**Note:** $I_{FSM}$ replaces the previously used symbol $I_{SM}$; ratings and test conditions are unchanged.


© 2026 Littelfuse, Inc.
Specifications are subject to change without notice.
Revised: AO.08/19/2026

## IXBOD2-21R...32R

| Symbol | Characteristics | Conditions | IXBOD2 Variant | Value | | | Units |
|---|---|---|---|---|---|---|---|
| | | | | Min. | Typ. | Max. | |
| $V_{BO}$ | Breakover Voltage | $V_{BO}(T_{vj}) = V_{BO}$, 25°C · [1 + $K_T$ ($T_{vj}$ - 25 °C)] | IXBOD2-21R | 2050 | 2100 | 2150 | V |
| | | | IXBOD2-22R | 2150 | 2200 | 2250 | |
| | | | IXBOD2-23R | 2250 | 2300 | 2350 | |
| | | | IXBOD2-24R | 2350 | 2400 | 2450 | |
| | | | IXBOD2-25R | 2450 | 2500 | 2550 | |
| | | | IXBOD2-26R | 2500 | 2600 | 2700 | |
| | | | IXBOD2-28R | 2700 | 2800 | 2900 | |
| | | | IXBOD2-30R | 2900 | 3000 | 3100 | |
| | | | IXBOD2-32R | 3100 | 3200 | 3300 | |
| $I_{RMS}$ | RMS On-state Current | f = 50 Hz $T_{amb}$ = 50 °C | | – | – | 1.4 | A |
| $I_{T(AVM)}$ | Maximum Average Forward | – | | – | – | 0.9 | A |
| $I_{FSM}$ | Non-repetitive Peak Forward Surge Current | $t_p$ = 0.1 ms; rectangular, non repetitive, $T_{vj}$ = 50 °C | | – | – | 200 | A |
| $I^2t$ | $I^2t$ Value | $t_p$ = 0.1 ms; $T_{vj}$ = 50 °C | | – | – | 4 | $A^2s$ |
| $V_T$ | On-state voltage | $T_{vj}$ = 125 °C; $I_T$ = 5 A | | – | – | 5.1 | V |
| $V_{TO}$ | Threshold Voltage | for power-loss calculation only | | – | – | 3.3 | V |
| $r_T$ | Slope Resistance | | | – | – | 0.36 | Ω |

**Note:** $I_{FSM}$ replaces the previously used symbol $I_{SM}$; ratings and test conditions are unchanged.

## IXBOD2-33R...42R

| Symbol | Characteristics | Conditions | IXBOD2 Variant | Value | | | Units |
|---|---|---|---|---|---|---|---|
| | | | | Min. | Typ. | Max. | |
| $V_{BO}$ | Breakover Voltage | $V_{BO}(T_{vj}) = V_{BO}$, 25°C · [1 + $K_T$ ($T_{vj}$ - 25 °C)] | IXBOD2-33R | 3200 | 3300 | 3400 | V |
| | | | IXBOD2-34R | 3300 | 3400 | 3500 | |
| | | | IXBOD2-36R | 3500 | 3600 | 3700 | |
| | | | IXBOD2-38R | 3700 | 3800 | 4000 | |
| | | | IXBOD2-40R | 3900 | 4000 | 4100 | |
| | | | IXBOD2-42R | 4100 | 4200 | 4300 | |
| $I_{RMS}$ | RMS On-state Current | f = 50 Hz $T_{amb}$ = 50 °C | | – | – | 1.1 | A |
| $I_{T(AVM)}$ | Maximum Average Forward | – | | – | – | 0.7 | A |
| $I_{FSM}$ | Non-repetitive Peak Forward Surge Current | $t_p$ = 0.1 ms; rectangular, non repetitive, $T_{vj}$ = 50 °C | | – | – | 200 | A |
| $I^2t$ | $I^2t$ Value | $t_p$ = 0.1 ms; $T_{vj}$ = 50 °C | | – | – | 4 | $A^2s$ |
| $V_T$ | On-state voltage | $T_{vj}$ = 125 °C; $I_T$ = 5 A | | – | – | 6.8 | V |
| $V_{TO}$ | Threshold Voltage | for power-loss calculation only | | – | – | 4.4 | V |
| $r_T$ | Slope Resistance | | | – | – | 0.48 | Ω |

**Note:** $I_{FSM}$ replaces the previously used symbol $I_{SM}$; ratings and test conditions are unchanged.


© 2026 Littelfuse, Inc.
Specifications are subject to change without notice.
Revised: AO.08/19/2026

## IXBOD2-11RD...20RD

| Symbol | Characteristics | Conditions | IXBOD2 Variant | Value | | | Units |
|---|---|---|---|---|---|---|---|
| | | | | Min. | Typ. | Max. | |
| $V_{BO}$ | Breakover Voltage | $V_{BO}(T_{vj}) = V_{BO}$, 25 °C · [1 + $K_T$ ($T_{vj}$ - 25 °C)] | IXBOD2-11RD | 1050 | 1100 | 1150 | V |
| | | | IXBOD2-12RD | 1150 | 1200 | 1250 | |
| | | | IXBOD2-14RD | 1350 | 1400 | 1450 | |
| | | | IXBOD2-15RD | 1450 | 1500 | 1550 | |
| | | | IXBOD2-16RD | 1550 | 1600 | 1650 | |
| | | | IXBOD2-17RD | 1650 | 1700 | 1750 | |
| | | | IXBOD2-18RD | 1750 | 1800 | 1850 | |
| | | | IXBOD2-19RD | 1850 | 1900 | 1950 | |
| | | | IXBOD2-20RD | 1950 | 2000 | 2050 | |
| $V_{RRM}$ | Repetitive Peak Reverse Voltage (internal diode) | $T_{vj}$ = 125 °C | | – | – | 6000 | V |
| $I_{RMS}$ | RMS On-state Current | f = 50 Hz $T_{amb}$ = 50 °C | | – | – | 0.3 | A |
| $I_{T(AVM)}$ | Maximum Average Forward | – | | – | – | 0.2 | A |
| $I_{FSM}$ | Non-repetitive Peak Forward Surge Current | $t_p$ = 0.1 ms; rectangular, non repetitive, $T_{vj}$ = 50 °C | | – | – | 50 | A |
| $I^2t$ | $I^2t$ Value | $t_p$ = 0.1 ms; $T_{vj}$ = 50 °C | | – | – | 0.125 | $A^2s$ |
| $V_T$ | On-state voltage | $T_{vj}$ = 125 °C; $I_T$ = 5 A | | – | – | 27 | V |
| $V_{TO}$ | Threshold Voltage | for power-loss calculation only | | – | – | 17.5 | V |
| $r_T$ | Slope Resistance | | | – | – | 3 | Ω |

**Note:** $I_{FSM}$ replaces the previously used symbol $I_{SM}$; ratings and test conditions are unchanged.


© 2026 Littelfuse, Inc.
Specifications are subject to change without notice.
Revised: AO.08/19/2026

## IXBOD2-21RD...36RD

| Symbol | Characteristics | Conditions | IXBOD2 Variant | Value | | | Units |
|---|---|---|---|---|---|---|---|
| | | | | Min. | Typ. | Max. | |
| $V_{BO}$ | Breakover Voltage | $V_{BO}(T_{vj}) = V_{BO}$, 25 °C · [1 + $K_T$ ($T_{vj}$ - 25 °C)] | IXBOD2-21RD | 2050 | 2100 | 2150 | V |
| | | | IXBOD2-22RD | 2150 | 2200 | 2250 | |
| | | | IXBOD2-23RD | 2250 | 2300 | 2350 | |
| | | | IXBOD2-24RD | 2350 | 2400 | 2450 | |
| | | | IXBOD2-25RD | 2450 | 2500 | 2550 | |
| | | | IXBOD2-26RD | 2500 | 2600 | 2700 | |
| | | | IXBOD2-28RD | 2700 | 2800 | 2900 | |
| | | | IXBOD2-30RD | 2900 | 3000 | 3100 | |
| | | | IXBOD2-32RD | 3100 | 3200 | 3300 | |
| | | | IXBOD2-36RD | 3500 | 3600 | 3700 | |
| $V_{RRM}$ | Repetitive Peak Reverse Voltage (internal diode) | $T_{vj}$ = 125 °C | | – | – | 6000 | V |
| $I_{RMS}$ | RMS On-state Current | f = 50 Hz $T_{amb}$ = 50 °C | | – | – | 0.3 | A |
| $I_{T(AVM)}$ | Maximum Average Forward | – | | – | – | 0.2 | A |
| $I_{FSM}$ | Non-repetitive Peak Forward Surge Current | $t_p$ = 0.1 ms; rectangular, non repetitive, $T_{vj}$ = 50 °C | | – | – | 50 | A |
| $I^2t$ | $I^2t$ Value | $t_p$ = 0.1 ms; $T_{vj}$ = 50 °C | | – | – | 0.125 | $A^2s$ |
| $V_T$ | On-state voltage | $T_{vj}$ = 125 °C; $I_T$ = 5 A | | – | – | 27 | V |
| $V_{TO}$ | Threshold Voltage | for power-loss calculation only | | – | – | 17.5 | V |
| $r_T$ | Slope Resistance | | | – | – | 3 | Ω |

**Note:** $I_{FSM}$ replaces the previously used symbol $I_{SM}$; ratings and test conditions are unchanged.

## Thermal Specifications and Package

| Symbol | Characteristics | | Value | | | Unit |
|---|---|---|---|---|---|---|
| | | | Min. | Typ. | Max. | |
| $R_{th(j-a)}$ | Thermal Resistance, Junction to Ambient | natural convection | – | – | 20 | K/W |
| | | with air speed 2 m/s | – | – | 16 | K/W |
| $T_{stg}$ | Storage Temperature Range | – | –40 to +125 | | | °C |
| $T_{amb}$ | Ambient Temperature (cooling medium) | – | –40 to +125 | | | °C |
| $T_{vj}$ | Virtual Junction Temperature Range | – | –40 to +125 | | | °C |
| G | Weight | – | – | 14 | – | g |


© 2026 Littelfuse, Inc.
Specifications are subject to change without notice.
Revised: AO.08/19/2026

## Packing Options

| Part Number | Marking | Packing Mode | MOQ |
|---|---|---|---|
| IXBOD2-12R | IXBOD2-12R | Box | 20 |
| IXBOD2-14R | IXBOD2-14R | Box | 20 |
| IXBOD2-15R | IXBOD2-15R | Box | 20 |
| IXBOD2-16R | IXBOD2-16R | Box | 20 |
| IXBOD2-17R | IXBOD2-17R | Box | 20 |
| IXBOD2-18R | IXBOD2-18R | Box | 20 |
| IXBOD2-19R | IXBOD2-19R | Box | 20 |
| IXBOD2-20R | IXBOD2-20R | Box | 20 |
| IXBOD2-21R | IXBOD2-21R | Box | 20 |
| IXBOD2-22R | IXBOD2-22R | Box | 20 |
| IXBOD2-23R | IXBOD2-23R | Box | 20 |
| IXBOD2-24R | IXBOD2-24R | Box | 20 |
| IXBOD2-25R | IXBOD2-25R | Box | 20 |
| IXBOD2-26R | IXBOD2-26R | Box | 20 |
| IXBOD2-28R | IXBOD2-28R | Box | 20 |
| IXBOD2-30R | IXBOD2-30R | Box | 20 |
| IXBOD2-32R | IXBOD2-32R | Box | 20 |
| IXBOD2-33R | IXBOD2-33R | Box | 20 |
| IXBOD2-34R | IXBOD2-34R | Box | 20 |
| IXBOD2-36R | IXBOD2-36R | Box | 20 |
| IXBOD2-38R | IXBOD2-38R | Box | 20 |
| IXBOD2-40R | IXBOD2-40R | Box | 20 |
| IXBOD2-42R | IXBOD2-42R | Box | 20 |
| IXBOD2-11RD | IXBOD2-11RD | Box | 20 |
| IXBOD2-12RD | IXBOD2-12RD | Box | 20 |
| IXBOD2-14RD | IXBOD2-14RD | Box | 20 |
| IXBOD2-15RD | IXBOD2-15RD | Box | 20 |
| IXBOD2-16RD | IXBOD2-16RD | Box | 20 |
| IXBOD2-17RD | IXBOD2-17RD | Box | 20 |
| IXBOD2-18RD | IXBOD2-18RD | Box | 20 |
| IXBOD2-19RD | IXBOD2-19RD | Box | 20 |
| IXBOD2-20RD | IXBOD2-20RD | Box | 20 |
| IXBOD2-21RD | IXBOD2-21RD | Box | 20 |
| IXBOD2-22RD | IXBOD2-22RD | Box | 20 |
| IXBOD2-23RD | IXBOD2-23RD | Box | 20 |
| IXBOD2-24RD | IXBOD2-24RD | Box | 20 |
| IXBOD2-25RD | IXBOD2-25RD | Box | 20 |



© 2026 Littelfuse, Inc.
Specifications are subject to change without notice.
Revised: AO.08/19/2026

## Packing Options

| Part Number | Marking | Packing Mode | MOQ |
|---|---|---|---|
| IXBOD2-26RD | IXBOD2-26RD | Box | 20 |
| IXBOD2-28RD | IXBOD2-28RD | Box | 20 |
| IXBOD2-30RD | IXBOD2-30RD | Box | 20 |
| IXBOD2-32RD | IXBOD2-32RD | Box | 20 |
| IXBOD2-36RD | IXBOD2-36RD | Box | 20 |

## Part Marking

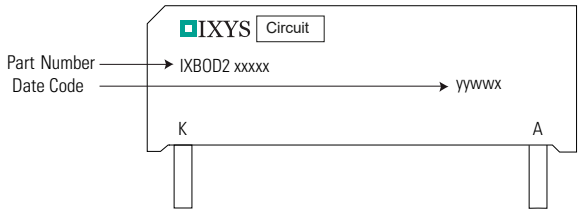


## Package Dimensions

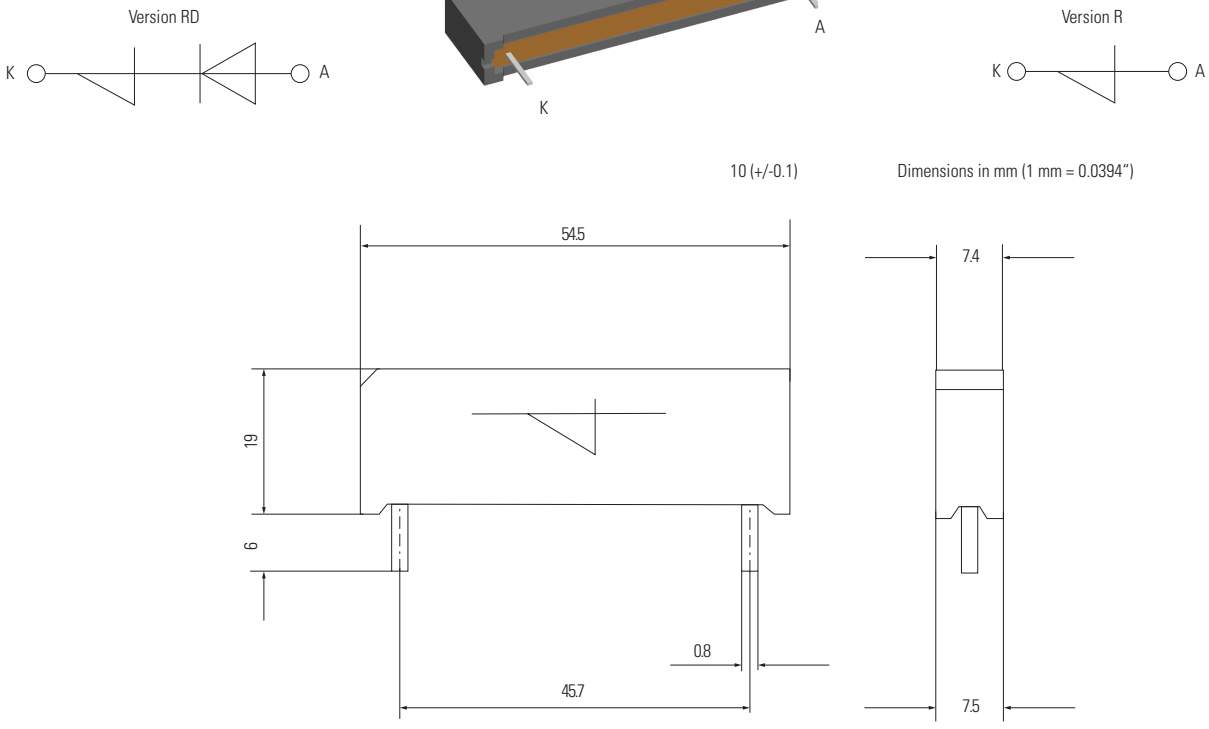


**Disclaimer Notice**

Information furnished is believed to be accurate and reliable. However, users should independently evaluate the suitability of and test each product selected for their own applications. Littelfuse products are not designed for, and may not be used in, all applications.
Read complete Disclaimer Notice at http://www.littelfuse.com/disclaimer-electronics.

IXYS Part of: Littelfuse
Expertise Applied | Answers Delivered



© 2026 Littelfuse, Inc.
Specifications are subject to change without notice.
Revised: AO.08/19/2026

## Characteristic Curves

**Fig. 1. Energy Per Pulse For Trapezoidal Current Waveforms (See Waveform Definition)**

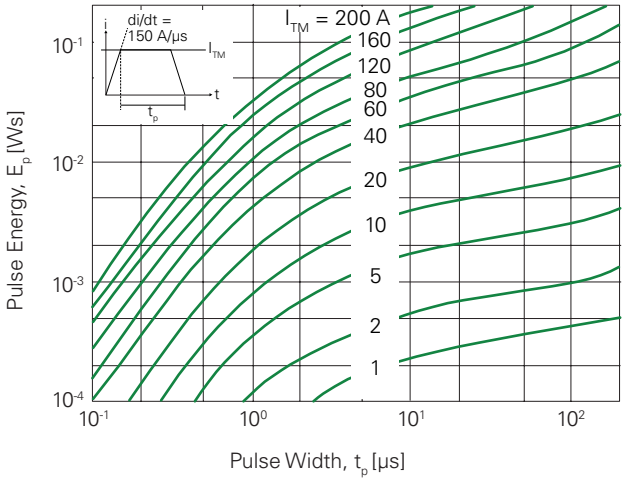


**Fig. 2. Energy Per Pulse For Exponentially Decaying Current Pulse (See Waveform Definition)**

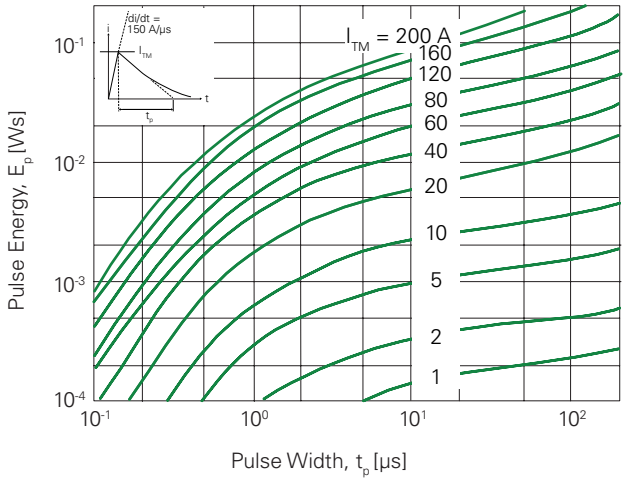


**Fig. 3. On-State Voltage @ $T_{vj}$ = 125 °C**

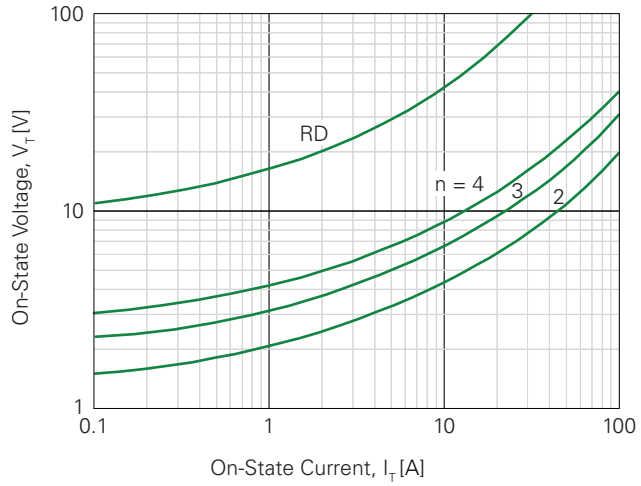


**Fig. 4. Transient Thermal Impedance**

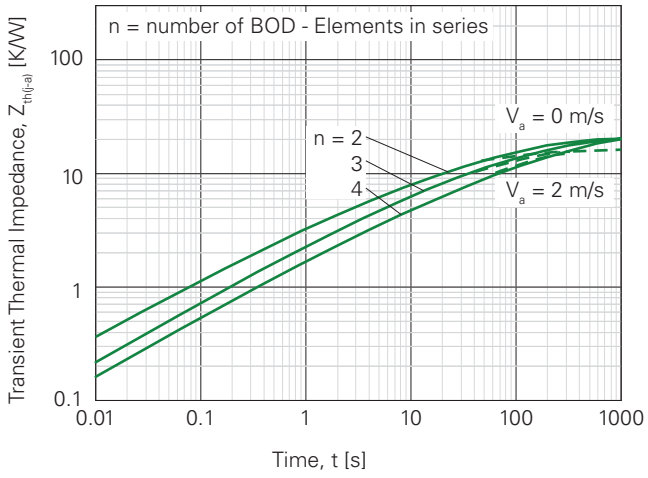


**Disclaimer Notice**

Information furnished is believed to be accurate and reliable. However, users should independently evaluate the suitability of and test each product selected for their own applications. Littelfuse products are not designed for, and may not be used in, all applications.
Read complete Disclaimer Notice at http://www.littelfuse.com/disclaimer-electronics.

IXYS Part of: Littelfuse Expertise Applied | Answers Delivered



© 2026 Littelfuse, Inc.
Specifications are subject to change without notice.
Revised: AO.08/19/2026