REVISION		
REV	DATE	DESCRIPTION
A	9/21/17	518212GCP - RELEASE MRY
B	6/17/19	520866ECP/D - ADD LABEL DETAIL MRY
C	8/9/19	521057ECP/D - CHG MOUNTING HOLE DIMENSIONS MRY

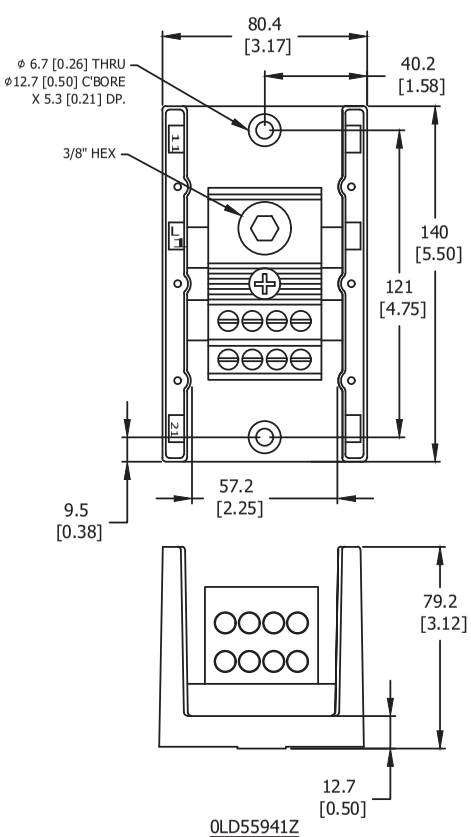

0LD55941Z

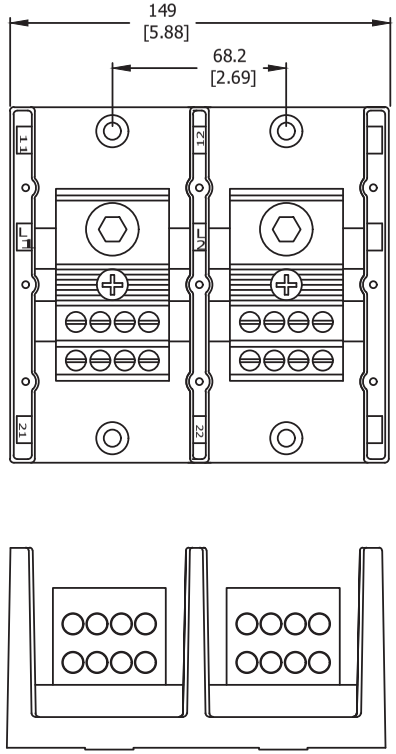

0LD55942Z

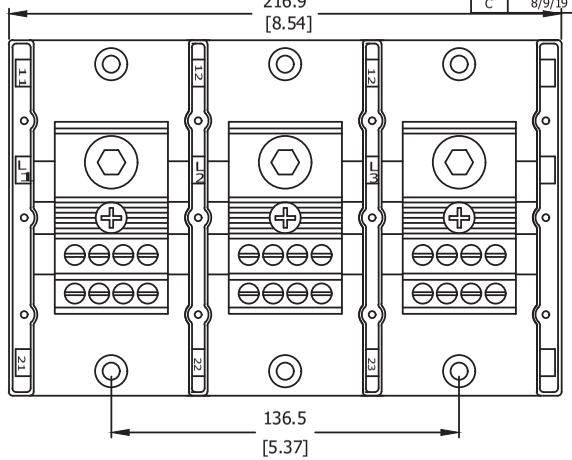

0LD55943Z

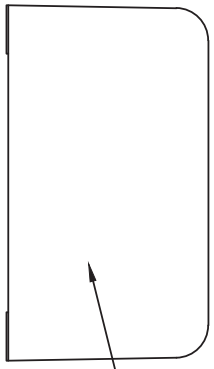

PRODUCT INFORMATION PROVIDED ON SIDE OF BLOCK

SPECIFICATIONS:

AGENCY INFORMATION:
- UL RECOGNIZED (FILE E171395)
- CSA CERTIFIED (FILE LR700111)

MATERIALS:
- GENERAL PURPOSE PHENOLIC PER ASTM D700-57T
- TEMPERATURE RATING 150°C (302°F)
- CONNECTOR: ALUMINUM, TIN PLATED

TERMINATION:
- LINE = (1) 500MCM-4 AWG
- LOAD = (8) #2-14 AWG

AMP RATING PER POLE: 380A Cu, 310A Al
- BASED ON NEC TABLE 310-16, 75°C WIRE

VOLTAGE RATING: 600V

TORQUE:

LINE:	500MCM-4 AWG	42.4 Nm (375 LB-IN)
LOAD:	#2 AWG	5.6 Nm (50 LB-IN)
	#4-6 AWG	5.1 Nm (45 LB-IN)
	#8 AWG	4.5 Nm (40 LB-IN)
	#10-14 AWG	4 Nm (35 LB-IN)

PART NUMBER (VARIES)

UPC CODE (VARIES)

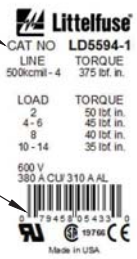

PRODUCT LABEL DETAIL

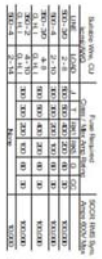

TOLERANCE (UNLESS OTHERWISE SPECIFIED):
2 PLACE ± 0.76 [0.03]
3 PLACE ± 0.38 [0.015]

●	DENOTES CRITICAL CHARACTERISTICS.
CPK	DENOTES CPK DIMENSIONS, -MINIMUM CPK VALUE
ST	DENOTES A CHARACTERISTIC THAT PROVIDES AN INDICATION OF PROCESS PERFORMANCE. PROCEDURE FOR MEASUREMENT AND TRACKING TO BE DEFINED IN LITTELFUSE INSPECTION INSTRUCTIONS.
CP	DENOTES CP DIMENSIONS, -MINIMUM CP VALUE MUST BE WITHIN THE DIMENSIONAL LIMITATIONS SHOWN ON DRAWING AND INITIALLY LOCATED TO ALLOW FOR MAXIMUM TOOL LIFE.

B

MATL SPEC		FINISH	
DRW myork	DATE 9/7/17	SCALE NTS	FINISH GOOD WT GRAMS/PIECE

UNLESS OTHERWISE SPECIFIED, DIMENSIONS ARE IN MILLIMETERS, DIMENSIONS IN BRACKETS [ ] ARE INCHES DIMENSIONING AND DO NOT INCLUDE PLATING. TOLERANCING TO BE INTERPRETED IN ACCORDANCE WITH ANSI Y14.5M-1994

3RD ANGLE PROJECTION

TITLE 0LD5594 SERIES DISTRIBUTION BLOCK OUTLINE

Littelfuse® CHICAGO, ILLINOIS 60631

REVISION	DRWG NO.	SHEET 1 OF 1
C	OL-LD5594	