PART NUMBER	UPC CODE
LDM3TLU01	07945835763

REVISION		
REV	DATE	DESCRIPTION
A	6/20/23	526557GCP - RELEASE MRY

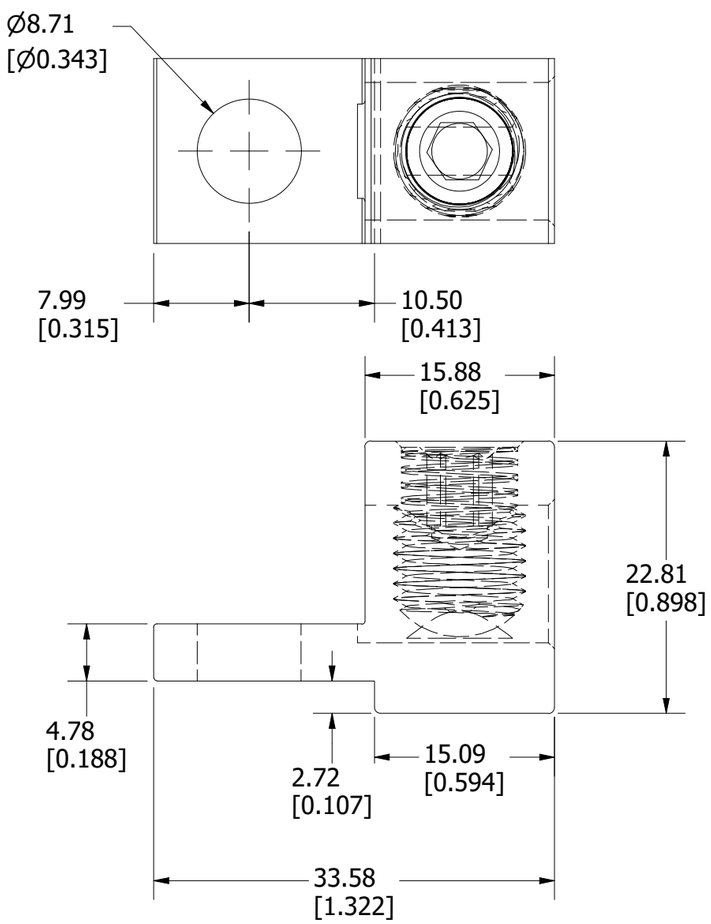

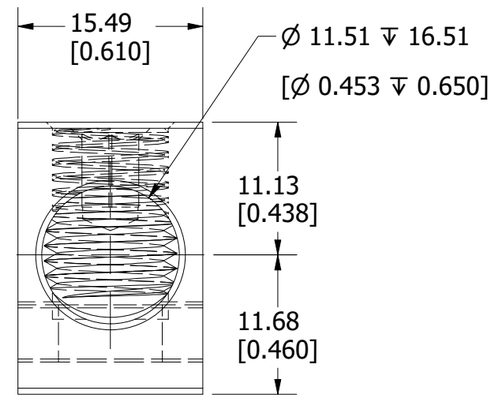

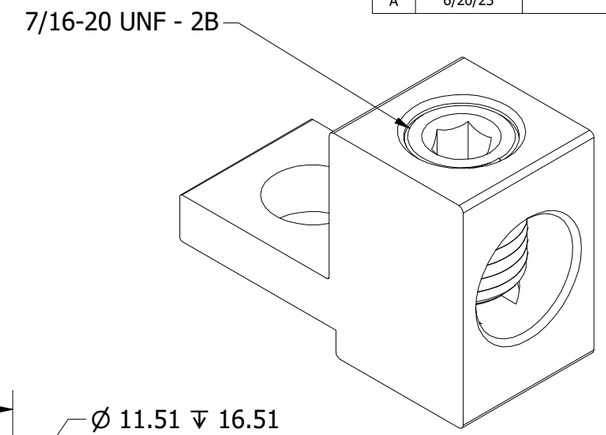

PRODUCT MARKING:
S/20
2/0-14
CU9AL
UL LOGO
CSA LOGO
IHI

1				
NO	COMPONENT NO	DESCRIPTION	QTY/M	U/M

BILL OF MATERIAL

<S>	CRITICAL CHARACTERISTIC FOR PART SAFETY/COMPLIANCE
●	DENOTES CRITICAL CHARACTERISTICS.
CPK	DENOTES CPK DIMENSIONS, -MINIMUM CPK VALUE
(ST)	DENOTES A CHARACTERISTIC THAT PROVIDES AN INDICATION OF PROCESS PERFORMANCE. PROCEDURE FOR MEASUREMENT AND TRACKING TO BE DEFINED IN LITTELFUSE INSPECTION INSTRUCTIONS.
CP	DENOTES CP DIMENSIONS, -MINIMUM CP VALUE MUST BE WITHIN THE DIMENSIONAL LIMITATIONS SHOWN ON DRAWING AND INITIALLY LOCATED TO ALLOW FOR MAXIMUM TOOL LIFE.

B

MATL SPEC	FINISH

DRW	DATE	SCALE	FINISH GOOD WT
myork	4/11/2023	NTS	GRAMS/PIECE

UNLESS OTHERWISE SPECIFIED, DIMENSIONS ARE IN MILLIMETERS, DIMENSIONS IN BRACKETS [ ] ARE INCHES DIMENSIONING AND DO NOT INCLUDE PLATING. TOLERANCING TO BE INTERPRETED IN ACCORDANCE WITH ANSI Y14.5M-1994

3RD ANGLE PROJECTION

TITLE
TERMINAL LUG OUTLINE

Littelfuse®
CHICAGO, ILLINOIS 60631

REVISION A

DRWG NO. OL-LDM3TLU01

SHEET 1 OF 1