KSC OF Series

Overload Friendly Tactile Switch

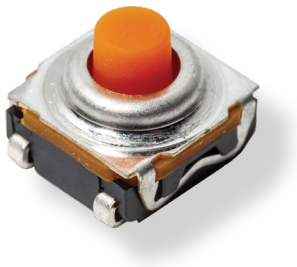

Description

KSC OF series overload friendly tactile switch, the new configuration of KSC with soft silicone actuator, J leads and raised cage to accept life time overload. The tact switch comes in tape and reel packaging.

Features & Benefits

- Extended cage for mechanical stop
- Silicone actuator
- J termination
- Tape & reel
- IP67

Applications

- Industrial electronics
- Consumer
- Medical equipment
- Automotive interior

Mechanical Characteristics

Part #	Force (N)	Operating Life (operations)	Travel (mm)
KSC421J 70SH LFS OF	1.65+/-0.45	300,000	0.5+/-0.25
KSC441J 70SH LFS OF	4.0+/-1.0	300,000	0.65+0.3/-0.2

Note: Life time is 300,000 cycles at 20N actuation force. The extended cage can be used as mechanical stop for the activation button. Overload value reaches 200N (one time)

Specifications

Packaging	In reels of 1,000 pieces Dimensions according to EIA RS-481/ IEC 2863 External diameter 330 ± 2 mm

Dimensions

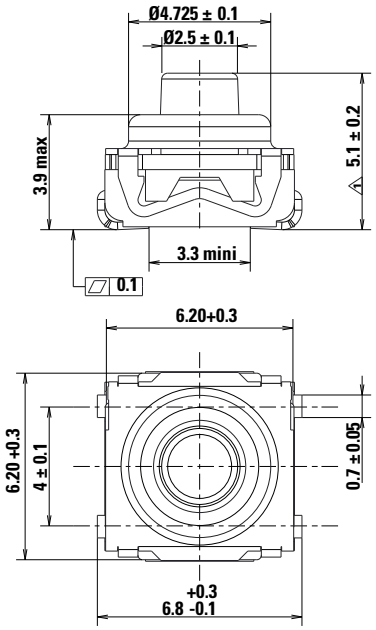

Ordering Number

Our easy build-a-switch concept allows you to mix and match options to create the switch you need. To order, select desired option from each category and place it in the appropriate box. For any part number different from those listed above, please consult your local representative.

KSC - 4 - x - 1 - J - 70SH - LFS - OF

Force
2: 1.65 N
4: 4.0 N

Contact Material
1: Silver

Termination
J: J Bend

Actuator / Tactile
70SH: Silicon 70SH

LFS: Lead free compatible, silver plated

Disclaimer Notice - Information furnished is believed to be accurate and reliable. However, users should independently evaluate the suitability of and test each product selected for their own applications. Littelfuse products are not designed for, and may not be used in, all applications. Read complete Disclaimer Notice at http://www.littelfuse.com/disclaimer-electronics.

© 2024 Littelfuse, Inc.
Specifications are subject to change without notice.
Revised: CM.07/08/24