OBSOLETE

IXYS

Advance Technical Information

GenX3™ 1200V IGBT w/ Diode

IXGN82N120C3H1

V_{CES}	=	1200V
I_{C110}	=	58A
$V_{CE(sat)}$	≤	3.9V

High-Speed PT IGBT for 20-50 kHz Switching

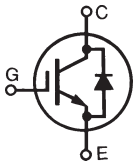

SOT-227B, miniBLOC
E153432

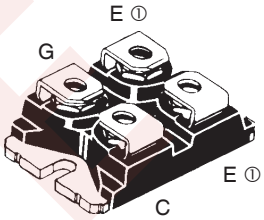

G = Gate, C = Collector, E = Emitter
① either emitter terminal can be used as Main or Kelvin Emitter

Symbol	Test Conditions		Maximum Ratings	
V_{CES}	T_J = 25°C to 150°C		1200	V
V_{CGR}	T_J = 25°C to 150°C, R_{GE} = 1MΩ		1200	V
V_{GES}	Continuous		±20	V
V_{GEM}	Transient		±30	V
I_{C25}	T_C = 25°C		130	A
I_{C110}	T_C = 110°C		58	A
I_{F110}	T_C = 110°C		42	A
I_{CM}	T_C = 25°C, 1ms		500	A
SSOA	V_{GE}= 15V, T_{VJ} = 125°C, R_G = 3Ω		I_{CM} = 164	A
(RBSOA)	Clamped Inductive Load		$V_{CE} \leq V_{CES}$	
P_C	T_C = 25°C		595	W
T_J			-55 ... +150	°C
T_{JM}			150	°C
T_{stg}			-55 ... +150	°C
V_{ISOL}	50/60Hz	t = 1min	2500	V~
	$I_{ISOL} \leq$ 1mA	t = 1s	3000	V~
M_d	Mounting Torque		1.5/13	Nm/lb.in.
	Terminal Connection Torque		1.3/11.5	Nm/lb.in.
Weight			30	g

Symbol	Test Conditions (T_J = 25°C, Unless Otherwise Specified)	Characteristic Values Min.	Typ.	Max.	
$V_{GE(th)}$	I_C = 1mA, V_{CE} = V_{GE}	3.0		5.0	V
I_{CES}	V_{CE} = V_{CES}, V_{GE} = 0V, Note 1			50	μA
	T_J = 125°C			6	mA
I_{GES}	V_{CE} = 0V, V_{GE} = ± 20V			±200	nA
$V_{CE(sat)}$	I_C = 82A, V_{GE} = 15V, Note 2		3.3	3.9	V

Features

- Optimized for Low Switching Losses
- Square RBSOA
- High Current Capability
- Isolation Voltage 2500 V~
- Anti-Parallel Ultra Fast Diode
- International Standard Package

Advantages

- High Power Density
- Low Gate Drive Requirement

Applications

- Power Inverters
- UPS
- SMPS
- PFC Circuits
- Welding Machines
- Lamp Ballasts

© 2009 IXYS CORPORATION, All Rights Reserved

OBSOLETE

Symbol	Test Conditions (T_J = 25°C, Unless Otherwise Specified)	Characteristic Values Min.	Typ.	Max.	
g_{fs}	I_C = 60A, V_{CE} = 10V, Note 2	38	62		S
C_{ies}	V_{CE} = 25V, V_{GE} = 0V, f = 1 MHz		7900		pF
C_{oes}			685		pF
C_{res}			197		pF
$Q_{g(on)}$	I_C = 82A, V_{GE} = 15V, V_{CE} = 0.5 • V_{CES}		340		nC
Q_{ge}			55		nC
Q_{gc}			145		nC
$t_{d(on)}$	**Inductive load, T_J = 25°C**		30		ns
t_{ri}	I_C = 82A, V_{GE} = 15V		77		ns
E_{on}	V_{CE} = 0.5 • V_{CES}, R_G = 2Ω		5.0		mJ
$t_{d(off)}$	Note 3		194		ns
t_{fi}			100		ns
E_{off}			2.5	5.0	mJ
$t_{d(on)}$	**Inductive load, T_J = 125°C**		32		ns
t_{ri}	I_C = 82A, V_{GE} = 15V		80		ns
E_{on}	V_{CE} = 0.5 • V_{CES}, R_G = 2Ω		6.8		mJ
$t_{d(off)}$	Note 3		230		ns
t_{fi}			270		ns
E_{off}			4.0		mJ
R_{thJC}				0.21	°C/W
R_{thCK}			0.05		°C/W

SOT-227B miniBLOC (IXGN)

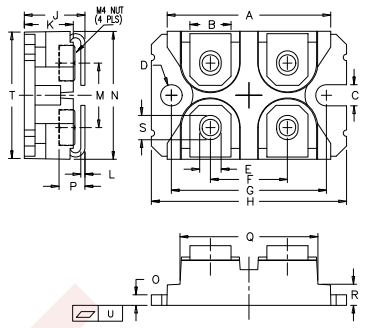

SYM	INCHES MIN	INCHES MAX	MILLIMETERS MIN	MILLIMETERS MAX
A	1.240	1.255	31.50	31.88
B	.307	.323	7.80	8.20
C	.161	.169	4.09	4.29
D	.161	.169	4.09	4.29
E	.161	.169	4.09	4.29
F	.587	.595	14.91	15.11
G	1.186	1.193	30.12	30.30
H	1.496	1.505	38.00	38.23
J	.460	.481	11.68	12.22
K	.351	.378	8.92	9.60
L	.030	.033	0.76	0.84
M	.496	.506	12.60	12.85
N	.990	1.001	25.15	25.42
O	.078	.084	1.98	2.13
P	.195	.235	4.95	5.97
Q	1.045	1.059	26.54	26.90
R	.155	.174	3.94	4.42
S	.186	.191	4.72	4.85
T	.968	.987	24.59	25.07
U	-.002	.004	-0.05	0.1

Reverse Diode (FRED)

Symbol	Test Conditions (T_J = 25°C, Unless Otherwise Specified)	Characteristic Values Min.	Typ.	Max.	
V_F	I_F = 60A, V_{GE} = 0V, Note 1			2.5	V
	T_J = 150°C		1.4	1.8	V
I_{RM}	I_F = 60A, V_{GE} = 0V, T_J = 100°C, $-di_F/dt$ = 200A/μs, V_R = 300V		8.3		A
t_{rr}			140		ns
R_{thJC}				0.42	°C/W

Notes:

1. Part must be heatsunk for high-temp Ices measurement.
2. Pulse test, t ≤ 300μs, duty cycle, d ≤ 2%.
3. Switching times & energy losses may increase for higher V_{CE}(Clamp), T_J or R_G.

ADVANCE TECHNICAL INFORMATION

The product presented herein is under development. The Technical Specifications offered are derived from a subjective evaluation of the design, based upon prior knowledge and experience, and constitute a "considered reflection" of the anticipated result. IXYS reserves the right to change limits, test conditions, and dimensions without notice.

IXYS Reserves the Right to Change Limits, Test Conditions, and Dimensions.

IXYS MOSFETs and IGBTs are covered by one or moreof the following U.S. patents: 4,835,592 4,931,844 5,049,961 5,237,481 6,162,665 6,404,065 B1 6,683,344 6,727,585 7,005,734 B2 7,157,338B2 4,850,072 5,017,508 5,063,307 5,381,025 6,259,123 B1 6,534,343 6,710,405 B2 6,759,692 7,063,975 B2 4,881,106 5,034,796 5,187,117 5,486,715 6,306,728 B1 6,583,505 6,710,463 6,771,478 B2 7,071,537

OBSOLETE

IXYS
A Littelfuse Technology

Disclaimer Notice - Information furnished is believed to be accurate and reliable. However, users should independently evaluate the suitability of and test each product selected for their own applications. Littelfuse products are not designed for, and may not be used in, all applications. Read complete Disclaimer Notice at www.littelfuse.com/disclaimer-electronics.