preliminary data

Fast Recovery Epitaxial Diode (FRED)

I_{FAVM} = 2x 165 A
V_{RRM} = 200 V
t_{rr} = 35 ns

Part number
DSEI2x161-02P

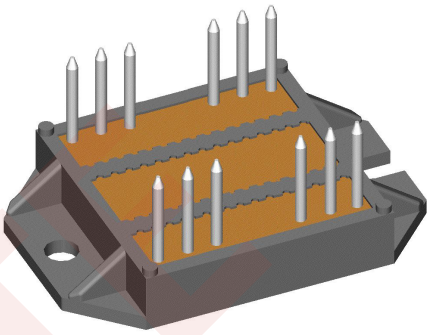

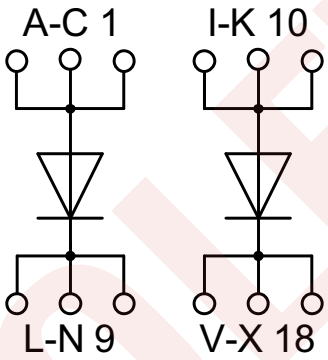

Features / Advantages:
- 2 independent FRED in 1 package
- Planar passivated chips
- Very short recovery time
- Leads suitable for PC board soldering
- Very short recovery time
- Soft recovery behaviour
- Easy to mount with two screws
- Space and weight savings
- Improved temperature and power cycling capability
- Low noise switching
- Small and light weight

Applications:
- Antiparallel diode for high frequency switching devices
- Anti saturation diode
- Snubber diode
- Free wheeling diode in converters and motor control circuits
- Rectifiers in switch mode power supplies (SMPS)
- Inductive heating and melting
- Uninterruptible power supplies (UPS)
- Ultrasonic cleaners and welders

Package: ECO-PAC2
- Isolation voltage: 3000 V~
- Industry standard outline
- RoHS compliant
- Soldering pins for PCB mounting
- Height: 9 mm
- Base plate: DCB ceramic
- Reduced weight
- Advanced power cycling

Disclaimer Notice

Information furnished is believed to be accurate and reliable. However, users should independently evaluate the suitability of and test each product selected for their own applications. Littelfuse products are not designed for, and may not be used in, all applications. Read complete Disclaimer Notice Disclaimer Notice at www.littelfuse.com/disclaimer-electronics.

© 2022 IXYS all rights reserved

preliminary data

Diode				Ratings			
Symbol	**Definitions**	**Conditions**		**min.**	**typ.**	**max.**	
I_{FRMS}	*RMS forward current*		$T_{VJ} = T_{VJM}$			270	A
I_{FAVM} ①	*max. average forward current*	rectangular, d = 0.5	T_C = 70°C			165	A
I_{FSM}	*max. surge forward current*	t = 10 ms (50 Hz), sine	T_{VJ} = 45°C			1200	A
		t = 8.3 ms (60 Hz), sine				1300	A
		t = 10 ms (50 Hz), sine	T_{VJ} = 150°C			1080	A
		t = 8.3 ms (60 Hz), sine				1170	A
I^2t	*I^2t value for fusing*	t = 10 ms (50 Hz), sine	T_{VJ} = 45°C			7200	A^2s
		t = 8.3 ms (60 Hz), sine				7100	A^2s
		t = 10 ms (50 Hz), sine	T_{VJ} = 150°C			5800	A^2s
		t = 8.3 ms (60 Hz), sine				5700	A^2s
I_R	*reverse current*	$V_R = V_{RRM}$	T_{VJ} = 25°C			3	mA
		$V_R = 0.8 \cdot V_{RRM}$	T_{VJ} = 25°C			2	mA
		$V_R = 0.8 \cdot V_{RRM}$	T_{VJ} = 125°C			80	mA
V_F	*forward voltage*	I_F = 200 A	T_{VJ} = 25°C			1.2	V
V_{T0}	*threshold voltage*	for power-loss calculations only	$T_{VJ} = T_{VJM}$			0.53	V
r_T	*slope resistance*					2.6	mΩ
R_{thJC}	*thermal resistance junction to case*					0.29	K/W
R_{thCH}	*thermal resistance junction to heatsink*				0.20		K/W
I_{RM}	*max. reverse recovery current*	I_F = 100 A; $-di_F/dt$ = 200 A/µs	T_{VJ} = 100°C		20		A
		V_R = 100 V; L ≤ 0.05 µH					
t_{rr}	*reverse recovery time*	I_F = 1 A; -di/dt = 400 A/µs; V_R = 30 V	T_{VJ} = 25°C		35		ns

① I_{FAVM} rating includes reverse blocking losses at T_{VJM}, $V_R = 0.8\ V_{RRM}$, duty cycle d = 0.5

OBSOLETE

© 2022 IXYS all rights reserved

preliminary data

Package	ECO-PAC2			Ratings			
Symbol	Definitions	Conditions		min.	typ.	max.	
I_{RMS}	*RMS current*	per terminal				100	A
T_{VJ} T_{op} T_{stg}	*virtual junction temperature* *operation temperature* *storage temperature*			-40 -40 -40		150 125 125	°C °C °C
Weight					24		g
M_D	*mounting torque*			1.4		2.0	Nm
$d_{Spp/App}$ $d_{Spb/Apb}$	*creepage distance on surface | striking distance through air*		terminal to terminal terminal to backside	6.0 10.0			mm mm
V_{ISOL}	*isolation voltage*	t = 1 second t = 1 minute	50/60 Hz, RMS; $I_{ISOL} \leq 1$ mA	3000 2500			V V

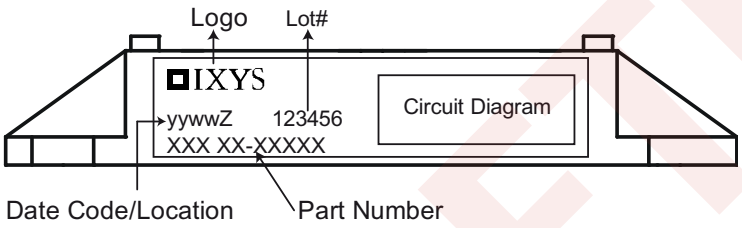

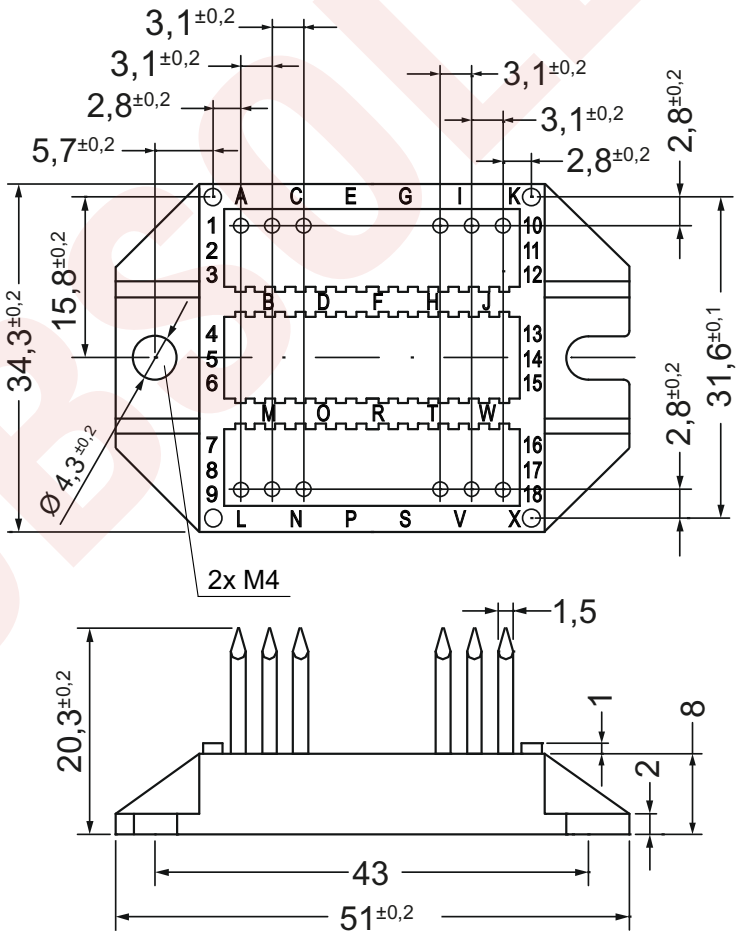

OBSOLETE

© 2022 IXYS all rights reserved