PART NUMBER
0LD45853ZX

REVISION		
REV	DATE	DESCRIPTION
A	3/11/24	527585GCP - RELEASE MRY

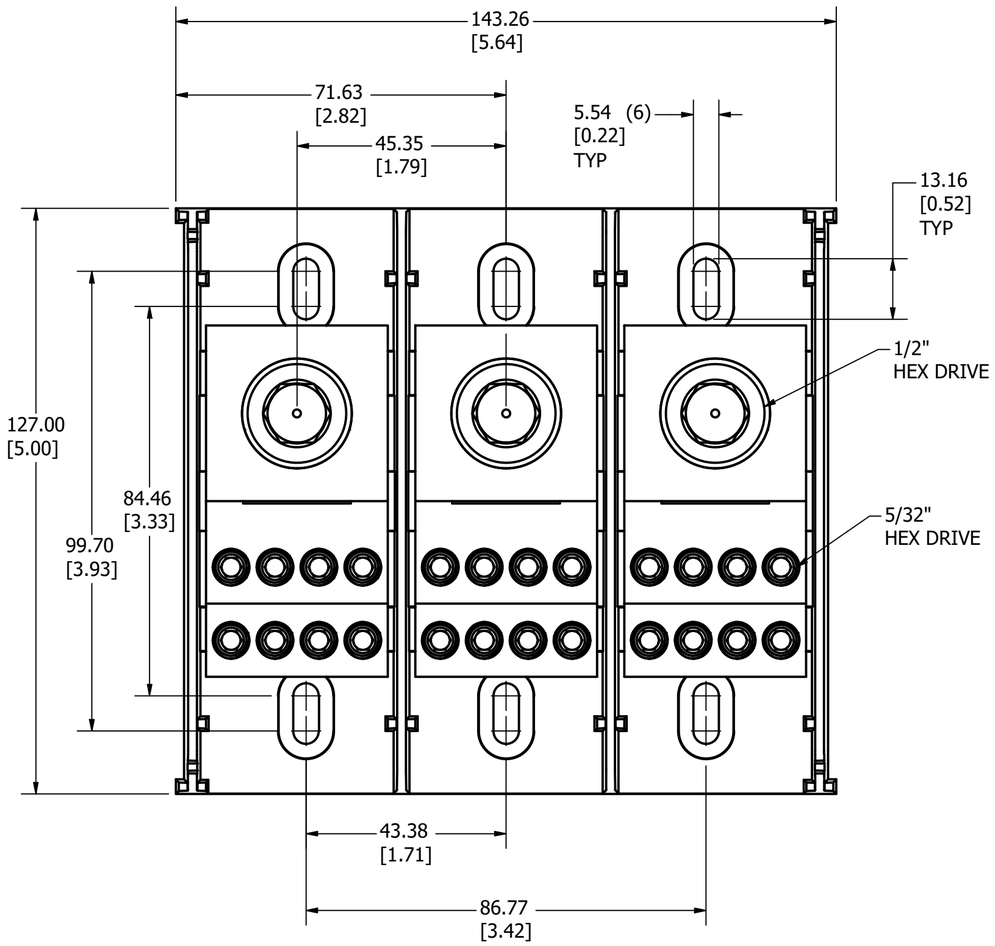

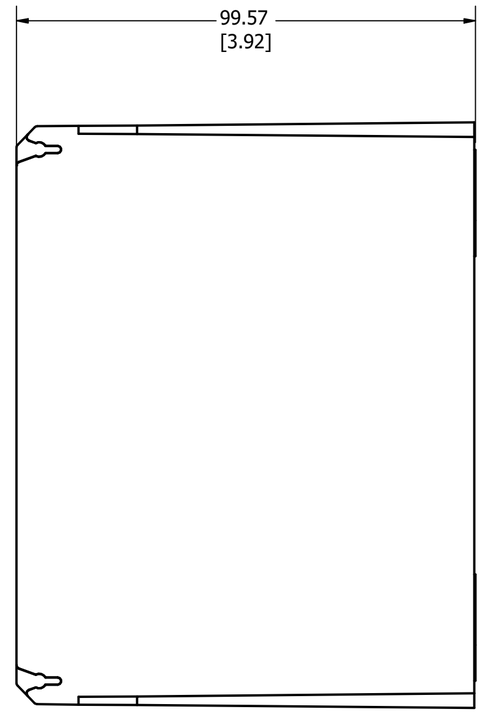

NOTES:

1. AGENCY INFORMATION: cULus - UL LISTED TO UL 1953
   EVALUATED TO CSA 22.2

2. MATERIALS: INSULATOR BASE: HIGH IMPACT THERMOPLASTIC
   FLAMMABILITY RATING UL94V0
   TEMP RATING: -40°C TO 125°C (UL RTI)
   CONNECTOR: ALUMINUM, TIN PLATED
   LINE TERMINAL SCREWS: ALUMINUM, TIN PLATED
   LOAD TERMINAL SCREWS: STEEL, NICKEL PLATED
   CONNECTOR MOUNTING SCREWS: STEEL, ZINC PLATED

3. TERMINATION: LINE: ALUMINUM, 600 kcmil - #2
   LOAD: COPPER STRANDED, #2 - 14 AWG
   SOLID COPPER, #10 - 14 AWG
   ALUMINUM STRANDED, #2 - 6 AWG

4. MAXIMUM AMP RATING PER POLE: 420A
   BASED ON NEC WIRE RATING CODE, 75°C WIRE

5. TORQUE: LINE: 42.4 N-m (375 lbf-in)
   LOAD: #2 AWG: 5.6 N-m (50 lbf-in)
   #4 - 6 AWG: 5.1 N-m (45 lbf-in)
   #8 AWG: 4.5 N-m (40 lbf-in)
   #10 - 14 AWG: 4 N-m (35 lbf-in)

6. MOUNTING: USE #10 FASTENER. TORQUE NOT TO EXCEED
   3.4 N-m (30 lbf-in).

TOLERANCE (UNLESS OTHERWISE SPECIFIED):
1 PLACE ± 2.5mm [0.10]
2 PLACE ± 0.76mm [0.03]
3 PLACE ± 0.381mm [0.015]

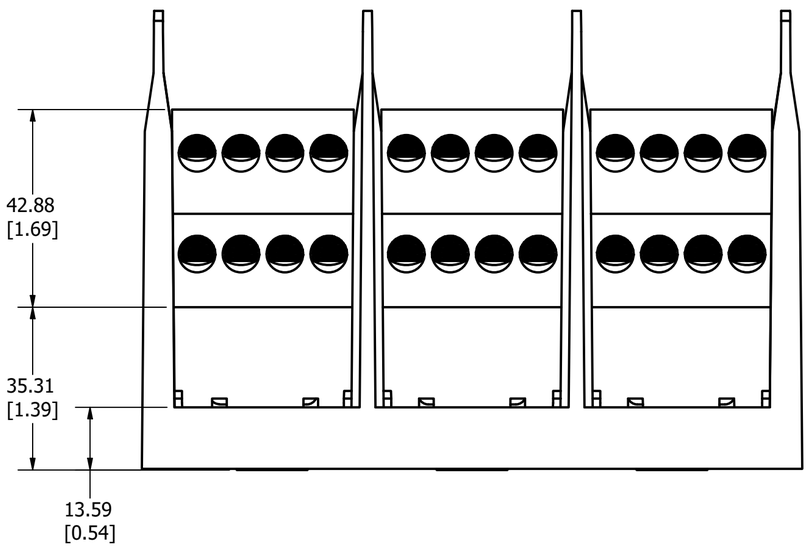

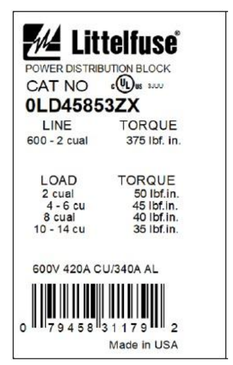

Suitable Wire, CU kcmil/AWG			Over-Current Protection Fuse Required Class / Max Amp Rating						SCCR RMS Sym. Amps 600V Max
CLASS	LINE	LOAD	J	T	RK1	RK5	G	CC	
B-C	600 - 3/0	2 - 6	450	450	400	200	60	30	100,000
	600 - 2	2 - 10	250	250	200	100	60	30	100,000
	600 - 2	2 - 14	125	125	100	30	60	30	100,000
G, H, I	350 - 3/0	4 - 6	450	450	400	200	60	30	100,000
	350 - 2	4 - 14	125	125	100	30	60	30	100,000
	600 - 2	2 - 14	None						10,000

NO	COMPONENT NO	DESCRIPTION	QTY/M	U/M

BILL OF MATERIAL

<S>	CRITICAL CHARACTERISTIC FOR PART SAFETY/COMPLIANCE
●	DENOTES CRITICAL CHARACTERISTICS.
CPK	DENOTES CPK DIMENSIONS, -MINIMUM CPK VALUE
⟨ST⟩	DENOTES A CHARACTERISTIC THAT PROVIDES AN INDICATION OF PROCESS PERFORMANCE. PROCEDURE FOR MEASUREMENT AND TRACKING TO BE DEFINED IN LITTELFUSE INSPECTION INSTRUCTIONS.
CP	DENOTES CP DIMENSIONS, -MINIMUM CP VALUE MUST BE WITHIN THE DIMENSIONAL LIMITATIONS SHOWN ON DRAWING AND INITIALLY LOCATED TO ALLOW FOR MAXIMUM TOOL LIFE.

C

MATL SPEC		FINISH	
DRW myork	DATE 1/25/2023	SCALE NTS	FINISH GOOD WT GRAMS/PIECE

UNLESS OTHERWISE SPECIFIED, DIMENSIONS ARE IN MILLIMETERS, DIMENSIONS IN BRACKETS [ ] ARE INCHES DIMENSIONING AND DO NOT INCLUDE PLATING. TOLERANCING TO BE INTERPRETED IN ACCORDANCE WITH ANSI Y14.5M-1994

3RD ANGLE PROJECTION

TITLE
DISTRIBUTION BLOCK 600V, 420A, 3 POLE OUTLINE

Littelfuse®
CHICAGO, ILLINOIS 60631

REVISION	DRWG NO.	SHEET 1 OF 1
A	OL-LD45853	