PART NUMBER
0LS43503ZX

REVISION		
REV	DATE	DESCRIPTION
A	3/11/24	527585GCP - RELEASE PER EM3406 MRY

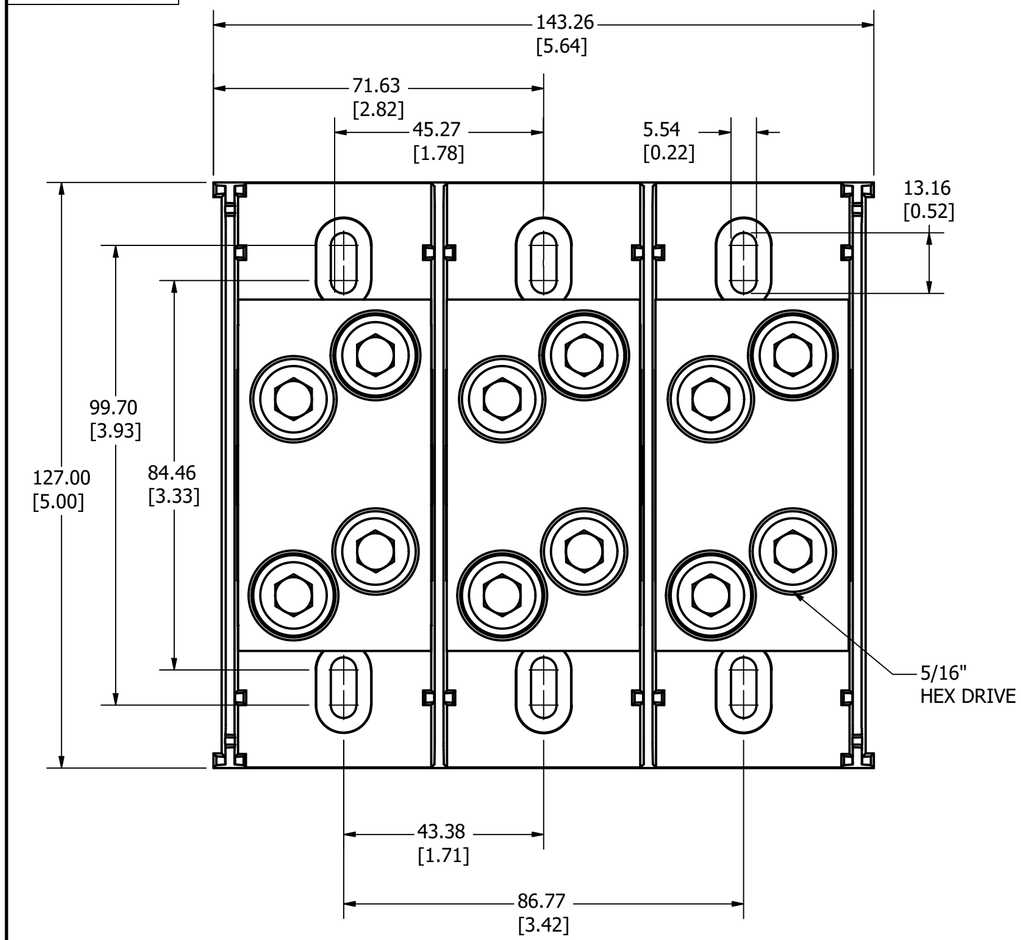

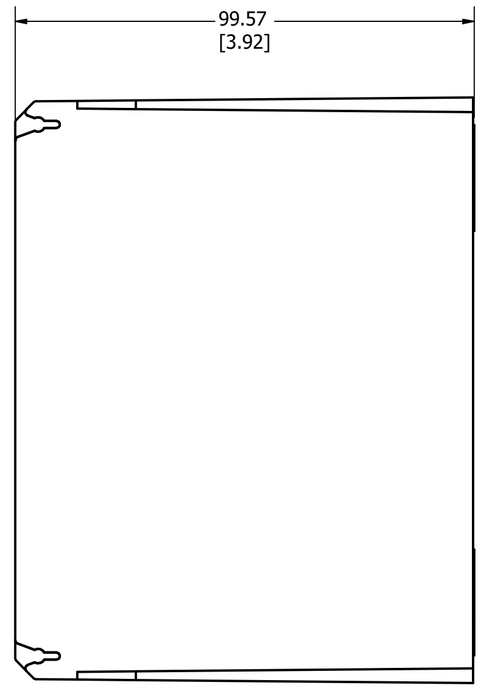

NOTES:

1. AGENCY INFORMATION: cULus - UL LISTED TO UL 1953
   UL EVALUATED TO CSA 22.2 NO. 158

2. MATERIALS: INSULATOR BASE: HIGH IMPACT THERMOPLASTIC
   FLAMMABILITY RATING UL94V0
   TEMP RATING: -40°C TO 125°C (UL RTI)
   CONNECTOR: ALUMINUM, TIN PLATED
   TERMINAL SCREWS: ALUMINUM, TIN PLATED
   CONNECTOR MOUNTING SCREWS: STEEL, ZINC PLATED

3. TERMINATION: LINE: COPPER STRANDED, 350 KCMIL - #6 AWG
   LOAD: COPPER STRANDED, 350 KCMIL - #6 AWG

4. MAXIMUM AMP RATING PER POLE: 620A
   BASED ON NEC WIRE RATING CODE, 75°C WIRE
   PROVIDES SPACING FOR USE IN FEEDER CIRCUITS
   AT 251-600V PER UL508A

5. TORQUE: LINE: 350 KCMIL - #6: 31 N-m (275 lbf-in)
   LOAD: 350 KCMIL - #6: 31 N-m (275 lbf-in)

6. MOUNTING: USE #10 FASTENER. TORQUE NOT TO EXCEED
   3.4 N-m (30 lbf-in).

TOLERANCE (UNLESS OTHERWISE SPECIFIED):
1 PLACE ± 2.5mm [0.10]
2 PLACE ± 0.76mm [0.03]
3 PLACE ± 0.381mm [0.015]

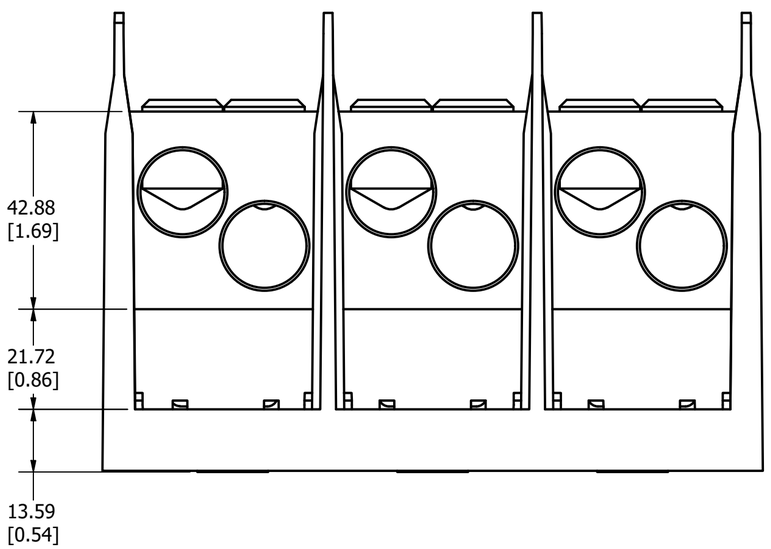

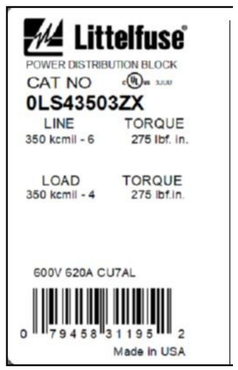

Suitable Wire, CU kcmil/AWG			Over-Current Protection Fuse Required Class / Max Amp Rating						SCCR RMS Sym. Amps 600V Max
CLASS	LINE	LOAD	J	T	RK1	RK5	G	CC	
B-C	350 - 4	350- 4	600	600	-	–	-	-	100,000
	350 - 4	350- 4	450	450	400	200	60	30	100,000
G,H,J	250 - 2	250 - 2	600	600	-	-	-	-	100,000
	250 - 2	250 - 2	450	450	400	200	60	30	100,000
	350 - 4	350 - 4	None						10,000

NO	COMPONENT NO	DESCRIPTION	QTY/M	U/M

BILL OF MATERIAL

<S>	CRITICAL CHARACTERISTIC FOR PART SAFETY/COMPLIANCE
●	DENOTES CRITICAL CHARACTERISTICS.
CPK	DENOTES CPK DIMENSIONS, -MINIMUM CPK VALUE
⟨ST⟩	DENOTES A CHARACTERISTIC THAT PROVIDES AN INDICATION OF PROCESS PERFORMANCE. PROCEDURE FOR MEASUREMENT AND TRACKING TO BE DEFINED IN LITTELFUSE INSPECTION INSTRUCTIONS.
CP	DENOTES CP DIMENSIONS, -MINIMUM CP VALUE MUST BE WITHIN THE DIMENSIONAL LIMITATIONS SHOWN ON DRAWING AND INITIALLY LOCATED TO ALLOW FOR MAXIMUM TOOL LIFE.

C

MATL SPEC		FINISH	
DRW myork	DATE 3/2/2023	SCALE NTS	FINISH GOOD WT GRAMS/PIECE

UNLESS OTHERWISE SPECIFIED, DIMENSIONS ARE IN MILLIMETERS, DIMENSIONS IN BRACKETS [ ] ARE INCHES DIMENSIONING AND DO NOT INCLUDE PLATING. TOLERANCING TO BE INTERPRETED IN ACCORDANCE WITH ANSI Y14.5M-1994

3RD ANGLE PROJECTION

TITLE
SPLICER BLOCK 600V, 620A, 3 POLE OUTLINE

Littelfuse®
CHICAGO, ILLINOIS 60631

REVISION A

DRWG NO. OL-LS43503

SHEET 1 OF 1