THIS DRAWING AND THE INFORMATION CONTAINED WITHIN IT ARE CONFIDENTIAL AND MAY NOT BE COPIED OR DISCLOSED WITHOUT THE WRITTEN PERMISSION OF LITTELFUSE.

FEMALE TERMINAL FOR ATO FUSE				
Cable Seal & terminals not provided by Littelfuse. For reference only				
CABLE SIZE mm²	FEMALE TERMINAL (TYCO STANDARD POWER TIMER)	CABLE DIA.	CABLE SEAL	BLANK CABLE SEAL
0.50 - 1.0	927836	1.4 - 2.1	963243-1/963244-1	100132-1
1.0 - 2.5	927835	2.2 - 3.0	963244-1/963245-1	
2.5 - 4.0	928966	3.4 - 3.7	963245-1	
3.0 - 5.0	1241962-1	4.2	967011-1	

REVISIONS

ZONE	REV.	DESCRIPTION	DATE	APPROVED
	A	5069333ERA NEW RELEASE EJIN	12/07/12	
	B	508954ECA 161.3±0.5 WAS 161.3; 39.6±0.2 WAS 39.8; 142.0±0.3 WAS 142.0±0.25; ADD Ø8.1±0.1; 129.3 WAS 128.8; 12.2 WAS 12; CHANGE BASE MATERIAL FROM PA66 30%GF TO PA66 15%GF; CHANGE COVER MATERIAL FROM PA66 TO PA66 15%GF; CHANGE TEMPERATURE RANGE 125 TO 85; CHANGE INPUT CAPABILITY 150 TO 210	07/19/13	
	C	509872ECA CHANGE THE NAME & UPDATE THE NOTES	11/28/13	
	D	510674ECA-CORRECT PART NUMBER OF COVER GASKET FYUE	06/25/14	
	E	515547ECA-CHANGE TYCO TERMINAL 927835 WAS 927837 FYUE	24/Mar/16	
	F	515613ECA-CHANGE MOUNTING TORQUE FYUE	25/Mar/16	
	G	524426ECC-UPDATE DIMENSIONS	24/Nov/21	EJIN

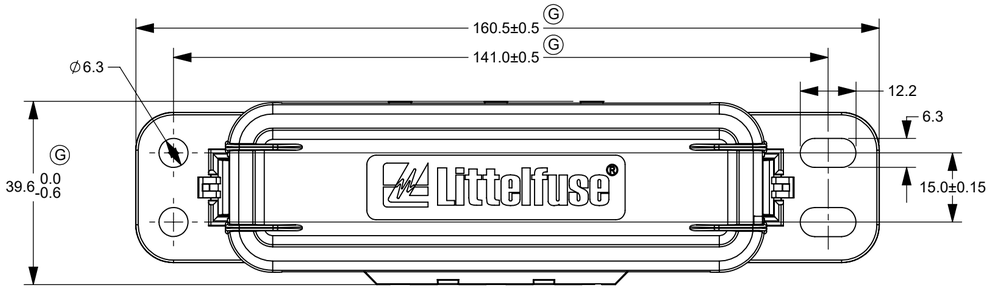

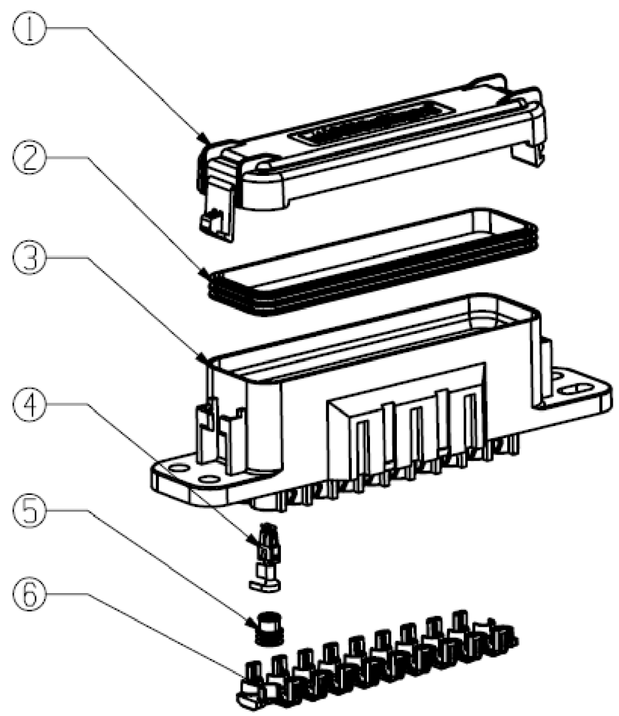

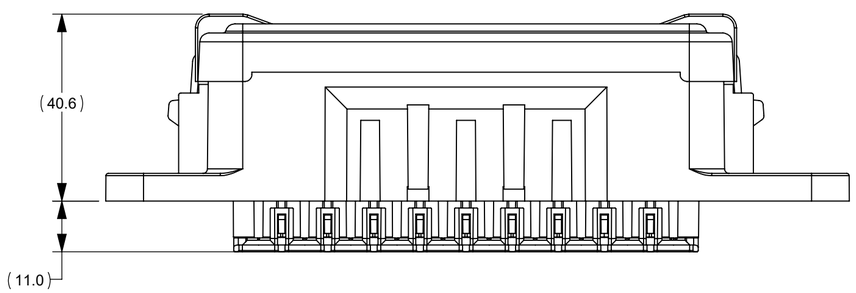

NOTES:
1. MATERIAL:
   COVER/BASE/TPA: BLACK THERMOPLASTIC-94V0
   SEAL: SILICONE RUBBER, GREEN
2. TORQUE RATING: 6-8 Nm USING M6 BOLT & LOCK WASHER.
3. FUSE RATING: 40A PER CIRCUIT.
4. OPERATING & STORAGE TEMPERATURE: -40°C TO 85°C
5. IP SEALING CLASS PER IEC60529 IP66 & IP67
6. TERMINAL RETENTION PER USCAR 2 SECTION 5.5.1.3 USING TYCO STANDARD POWER TIMER TERMINALS (SEALED).
7. TPA RETENTION PER USCAR 2 SECTION 5.4.4.4
8. MAX. CONTINOUS CURRENT: 210A FOR ENTIRE FUSEHOLDER.

NO	COMPONENT NO	DESCRIPTION	QTY/M	U/M
6	883-027	TPA		
5	SEE TABLE	SINGLE CABLE SEAL		
4	SEE TABLE	STANDARD POWER TIMER		
3	868-053	HOUSING		
2	901-057	COVER GASKET		
1	873-014	COVER		

BILL OF MATERIAL

DIMENSIONS ARE SHOWN IN MILLIMETERS. DIMENSIONS AND TOLERANCES ARE DEFINED ACCORDING TO ANSI/ASME Y14.5-1994.

PER CHI-NPD20-0008 PROCEDURE

●	FIT/ FUNCTION CRITICAL CHARACTERISTICS
<S>	SAFETY/ COMPLIANCE CRITICAL CHARACTERISTICS SYMBOL
CPK	DENOTES CPK DIMENSIONS MINIMUM CPK VALUE
⟨ST⟩	DENOTES A CHARACTERISTIC THAT PROVIDES AN INDICATION OF PROCESS PERFORMANCE.PROCEDURE FOR MEASUREMENTAND TRACKINGTO BE DEFINED IN LITTELFUSE INSPECTION INSTRUCTIONS
CP	DENOTES CP DIMENSIONS, -MINIMUM CP VALUE MUST BE WITHIN THE DIMENSIONAL LIMITATIONS SHOWN ON DRAWING AND INITIALLY LOCATED TO ALLOW FOR MAXIMUM TOOL LIFE

	NAME	DATE
DRAWN	EJIN	12/18/12
CHECKED	FRANK YUE	25/Nov/21
	-	-
	-	-

FORM NO: CVP-PE40-0005 REV B

THIRD ANGLE PROJECTION

DO NOT SCALE DRAWING

Littelfuse®
Expertise Applied | Answers Delivered

TITLE
HWA20 FUSEHOLDER

SIZE	DWG. NO.		REV.
C	OUTLINE	OL-PDM61001ZXM	G

SCALE 1:1 SHEET 1 OF 1