Circuit Protection & Interrupter Subassemblies

PSU-02 Series

Power Supply Unit for PMR Tripping

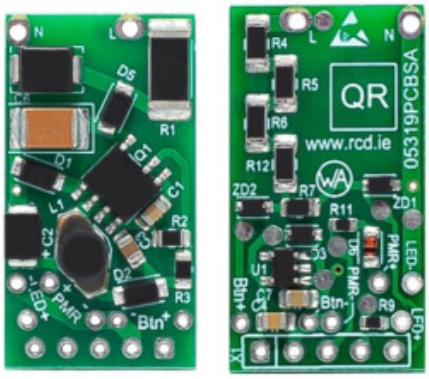

Description

The PSU-02 is a compact ac-to-dc converter delivering a stable 5 V output, designed for use with the WA AFD-01 module to create a space-efficient Arc Fault Detection solution for OEM circuit breakers. It features an integrated driver for PMR-based tripping mechanisms and supports external connections for a test button and status LED.

Features & Benefits

FEATURES	BENEFITS
Operates directly from ac mains	Simplifies system design by eliminating the need for external transformers or converters, reducing component count and overall cost.
High stability and very low noise output	Ensures reliable performance of sensitive electronics, minimizing interference with adjacent circuitry.
Integrated SCR driver for circuit breakers based on solenoid tripping	Simplifies design by eliminating separate driver components, saving space and cost in PMR-based breaker systems.

Applications

- OEM Circuit Breakers

Ordering Information

CATALOG #	DESCRIPTION
90154	PSU-02 Power Solenoid Unit for PMR Tripping

©2025 Littelfuse, Inc.
Specifications are subject to change without notice.

Revised: 11/12/2025

Specifications

AC Supply Voltage Range	180 V to 275 V ac
DC Output Voltage	5 V dc ±1%
Maximum Output Current	10 mA
Maximum Output Ripple	5 mV
Minimum Solenoid dc Impedence	50 Ω
Environmental Operating Conditions	-25 °C to +85 °C
Relevant Product Standard	IEC 62606 (Applicable in combination with the AFD-01 and when integrated in the customer's circuit breaker)
Size (Width x Length x Height)	15 mm x 28 mm x 15 mm
Weight	< 3 g

Dimensional Drawings (Millimeters)

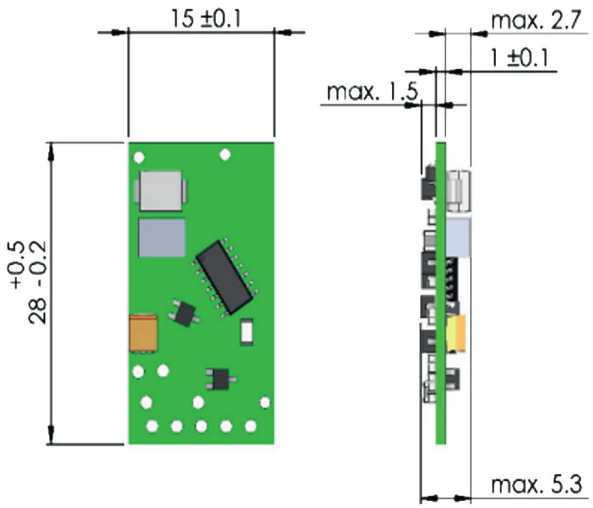

Handling Instructions

Care should be taken to ensure the correct connection of the PSU-02. Miswiring the product may cause permanent damage.

ESD Caution

PCBA contains ESD (electrostatic discharge) sensitive devices. Damage may occur on devices subjected to high-energy ESD. Therefore, proper ESD precautions should be taken to avoid performance degradation or loss of functionality.

©2025 Littelfuse, Inc.
Specifications are subject to change without notice.
Revised: 11/12/2025

Wiring Diagram

PSU-02 SYSTEM CONNECTION

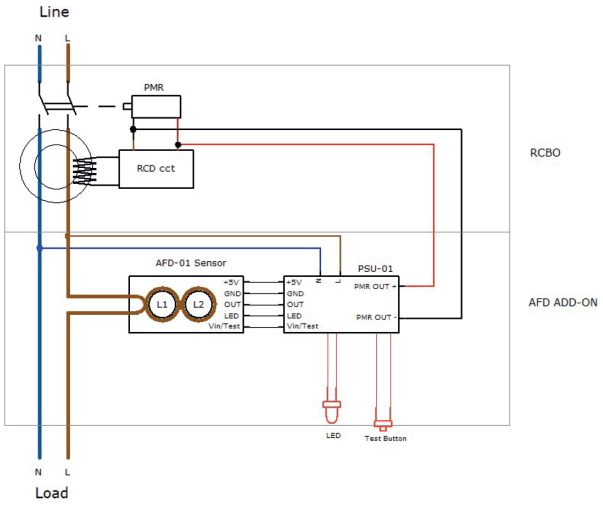

NAME	DESCRIPTION
L	Supply Live
N	Supply Neutral
PMR+	PMR Tripping Signal (positive)
PMR-	PMR Tripping Signal (negative)
LED+ / LED-	"Fault" LED Output
Btn+ / Btn-	Test Button
+5 V dc	Regulated Power Supply
Trip	Tripping Signal Input (connect to OUT from AFD-01)
LED	LED Input (connect to LED from AFD-01)
Vin / Test	Mains / Test Output (connect to Vin / Test to AFD-01)

Standards Conformity & Certifications

Product Safety Certifications

Products tested, compliant and certified to the following standards that states the requirements for electrical products to ensure they are safe for consumers to use.

CERTIFICATION BODY MARK	CERTIFICATION BODY NAME	CERTIFICATION DESCRIPTION	STANDARDS COVERED BY THE CERTIFICATION
IEC	IEC	Conformity with the international standard for arc fault detection devices (AFDDs) for household and similar uses, intended to be used in ac circuits for rated voltages not exceeding 440 V ac with rated frequencies of 50 Hz, 60 Hz, or 50/60 Hz and rated currents not exceeding 63 A.	**IEC 62606 when used with AFD-01**

Environmental Compliance

Products comply to the following environmental standard requirements for electrical products to ensure they are safe for consumers to use.

-	STANDARD NAME	STANDARD DESCRIPTION	STANDARD NUMBER
RoHS	RoHS	Conformity with the European Restriction of Hazardous Substances in electrical and electronic products.	European Union RoHS 2 Directive 2011/65/EU

Related Products

AFD-01: AC Arc Fault Current Detector

PSU-02: Power Supply Unit for Solenoid Tripping

Disclaimer Notice – Information furnished is believed to be accurate and reliable. However, users should independently evaluate the suitability of and test each product selected for their own applications. Littelfuse products are not designed for, and may not be used in, all applications. Read complete Disclaimer Notice at **www.littelfuse.com/product-disclaimer.**

©2025 Littelfuse, Inc.
Specifications are subject to change without notice.
Revised: 11/12/2025