CURREN RATE [A]	VERSIONS AND PART NUMBERS
3	0MIN003.VPGLO
5	0MIN005.VPGLO
7.5	0MIN007.5VPGLO
10	0MIN010.VPGLO
15	0MIN015.VPGLO
20	0MIN020.VPGLO
25	0MIN025.VPGLO
30	0MIN030.VPGLO

LTR	DATE	REVISION	DRW
A	01/FEB/23	526135GCA - INITIAL RELEASE	OPL

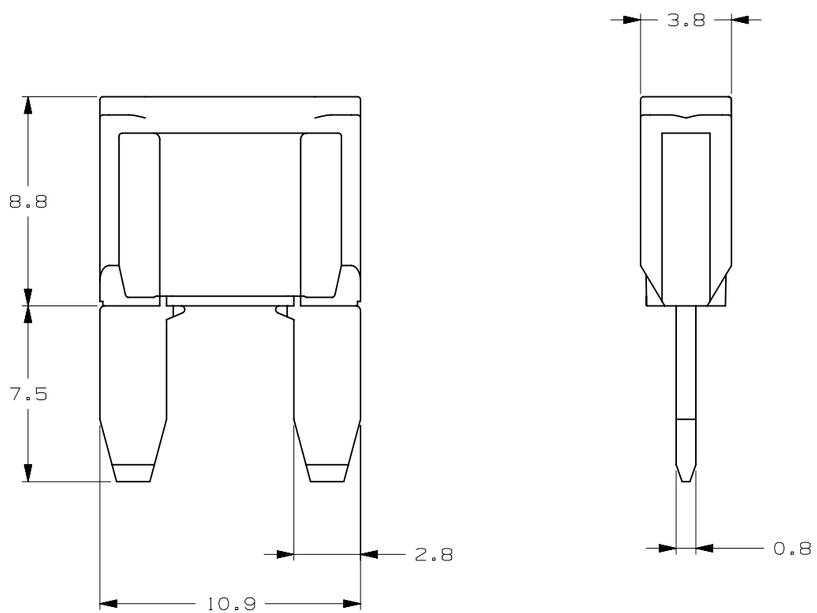

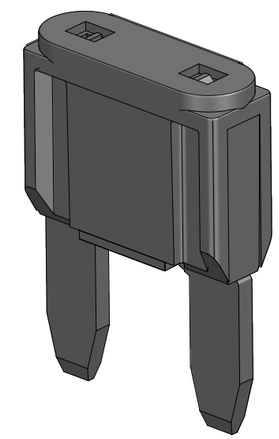

ISOMETRIC VIEW

MINI SMART GLOW 32V	
TERMINAL MATERIAL:	ZINC ALLOY
TERMINAL PLATING:	TIN
HOUSING MATERIAL:	PA66 (U.L. 94 FLAMMABILITY RATING V-2)

LINEAR DIMENSIONS					ANGLES	RADII
DIM	.5 - 6	6 - 30	30 - 120	120 - 400	±0.5°	±0.2
TOL	±0.1	±0.2	±0.3	±0.5		

3RD ANGLE PROJECTION

Littelfuse®
CHICAGO, USA 773-628-1000

REVISION: A

DRWG. NO. WEB-0MIN000.VPGLO