7787

MM	IN
0.50	.020
0.76	.030
2.28	.090
4.57	.180
4.82	.190
5.58	.220
8.63	.340
9.14	.360
9.65	.380
10.41	.410
15.24	.600
16.76	.660
18.28	.720
19.55	.770
20.57	.810
21.33	.840
22.09	.870
22.35	.880
22.60	.890
28.44	1.120
35.81	1.410
40.38	1.590
41.91	1.650
44.19	1.740
45.95	1.760

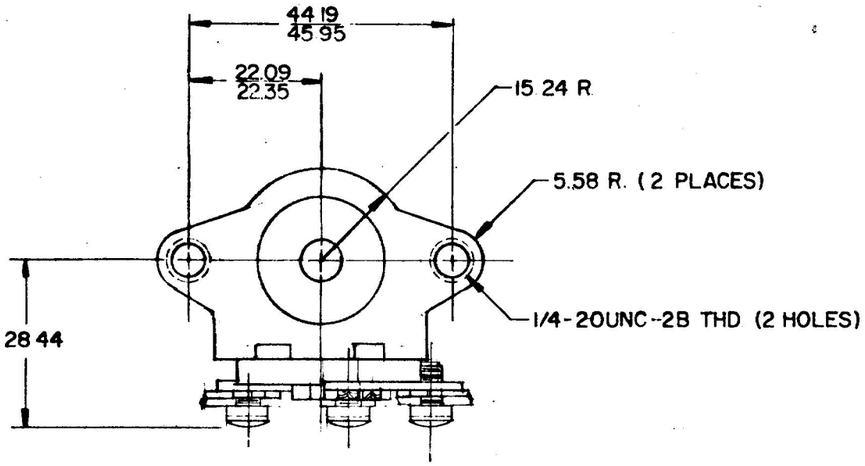

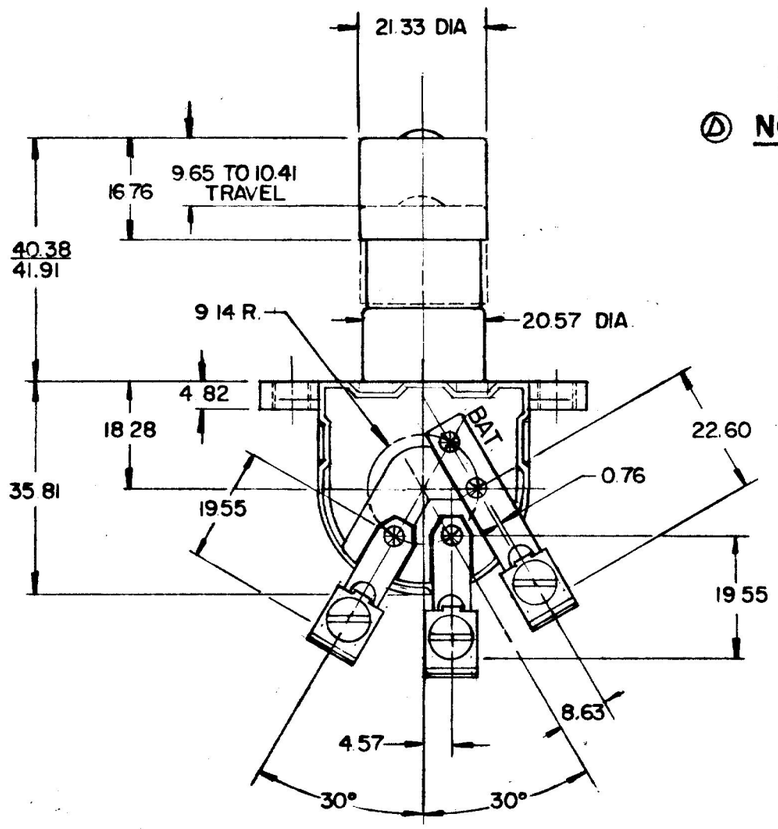

Ⓓ **NOTE:**

TERMINAL SCREWS TO BE ASSEMBLED WITH *CLEARANCE FOR* TERMINAL L'WASHER ASSEMBLY. SCREWS TO BE TIGHT TO PREVENT CHANGING POSITION IN SHIPMENT.

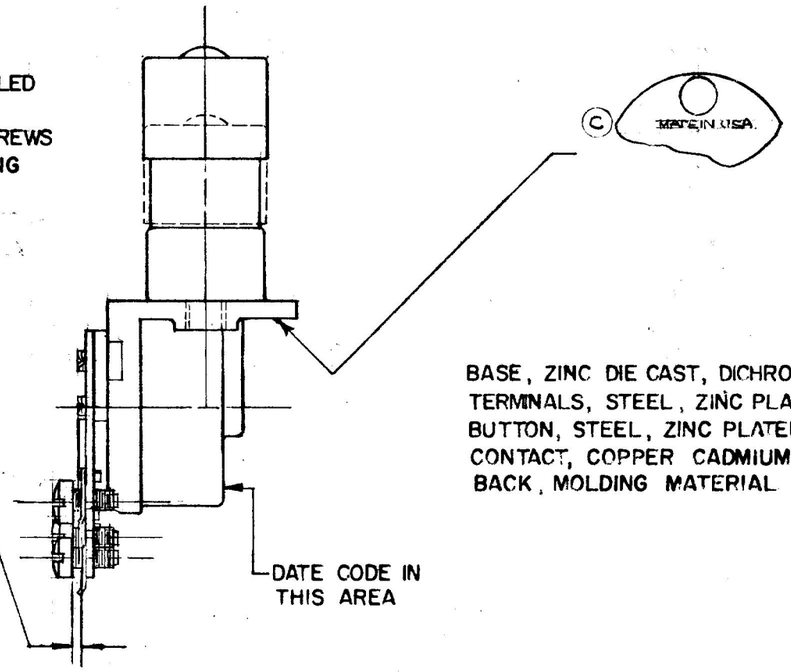

BASE, ZINC DIE CAST, DICHROMATED
TERMINALS, STEEL, ZINC PLATED
BUTTON, STEEL, ZINC PLATED
CONTACT, COPPER CADMIUM
BACK, MOLDING MATERIAL

COLE-HERSEE CO.
NPM 6-8-77

DO NOT SCALE

LET	WAS	DATE	BY	LET	WAS	DATE	BY
				D	REVISED NOTE 21338	3-4-81	[illegible]
				C	MADE IN USA CIRCLE IND. ADDED	4-3-78	[illegible]
				B	[illegible]	3-30-78	JV

MATERIAL	DRAWN	CHECKED	APPRV'D.	SCALE		DATE DRAWN
— // —	RMT	[illegible] 3-30-78		FULL		3-16-77
FINISH — // —	COLE-HERSEE COMPANY BOSTON, MASS. 02127, U.S.A.					DATE BLUEPRINT
TOLERANCES FRACTIONAL ± DECIMAL ±.02	DIMMER SWITCH					7787

METRIC

SPAULDING CO., INC. 21-10961

Confidential Property of Cole Hersee