[illegible]	[illegible]
[illegible]	.144
[illegible]	.218
[illegible]	.343
[illegible]	.453
[illegible]	.468
[illegible]	.687
[illegible]	.703
[illegible]	.937
[illegible]	1.265
[illegible]	1.375
[illegible]	1.687
[illegible]	1.750

9001

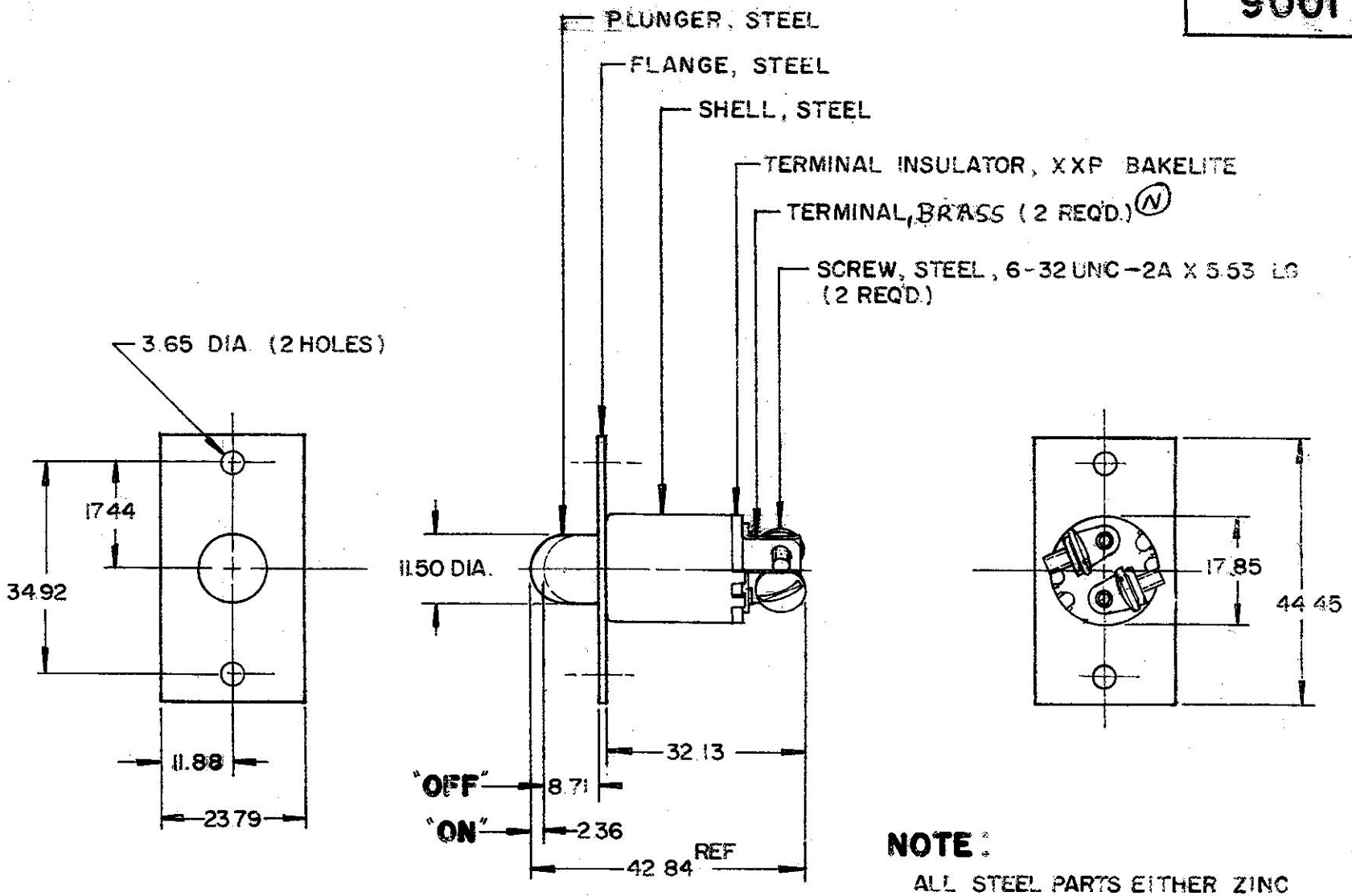

NOTE:

ALL STEEL PARTS EITHER ZINC PLATE WITH DICHROMATE DIP OR CADMIUM PLATE.

METRIC

CONFIDENTIAL PROPERTY OF COLE HERSEE

DO NOT SCALE

LET	WAS	DATE	BY	LET	WAS	DATE	BY
				N	ECN 09002	1-16-09	S/G
				M	REDRAWN	10-27-78	JV

MATERIAL	DRAWN	CHECKED	APPRV'D.	SCALE	DATE DRAWN
//	R M	11-3-78		1 1	8 - 23 - 51
FINISH	Cole Hersee Co. 20 OLD COLONY AVENUE, SOUTH BOSTON, MA. U.S.A. 02127				DATE BLUEPRINT
TOLERANCES FRACTIONAL ± DECIMAL ±0.25	DOOR SWITCH				9001

CH-1881 (4-78)