PART NUMBER	FUSEHOLDER	"A"	"B"	"C"	"D"	LEAD "A" COLOR	LEAD "B" COLOR	FUSE	WIRE SIZE
0FHM0002ZXJB-F10	0FHM0002ZXJB	167±3 [6.575±.12]	167±3 [6.575±.12]	8±2 [.315±.08]	17±2 [.67±.08]	ORANGE	RED	0297010.WXNV	12 AWG
0FHM0002ZXJC-F10	0FHM0002ZXJC	467±6.4 [18.386±.25]	127±3 [5.0±.12]	5.5±2 [.22±.08]	15.88±2 [.625±.08]	ORANGE	RED	0297010.WXNV	12 AWG
0FHM0003ZXJB-F05	0FHM0003ZXJB	93.41±5 [3.68±.2]	93.41±5 [3.68±.2]	6.35±2 [.25±.08]	6.35±2 [.25±.08]	BLACK	BLACK	0297005.WXNV	16 AWG
0FHM0003ZXJC-F10	0FHM0003ZXJC	322.04±5 [12.68±.2]	72.01±5 [2.84±.2]	12.70±2 [.50±.08]	6.35±2 [.25±.08]	BLACK	BLACK	0297010.WXNV	16 AWG
0FHM0002ZXJG-F10	0FHM0002ZXJG	110±5 [4.331±.2]	195±5 [7.677±.2]	10±2 [.394±.08]	17±2 [.67±.08]	ORANGE	RED	0297010.WXNV	12 AWG

LTR	DATE	REVISION	CHK	APD
A	06/30/08	000431ER - RELEASE GMB		
B	09/10/09	000808ER-RELEASE 0FHM0002ZXJG-F10 GMB		
C	06/04/09	001132EC-ON 0FHM0002ZXJG AND 0FHM0002ZXJG-F10, CHG. 105±5 TO 110±5, 225±5 TO 195±5, AND 8±2 TO 10±2 GMB		

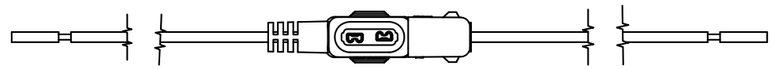

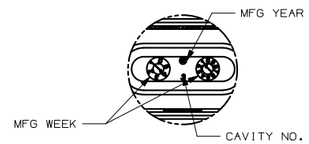

DETAIL B
SCALE 2:1

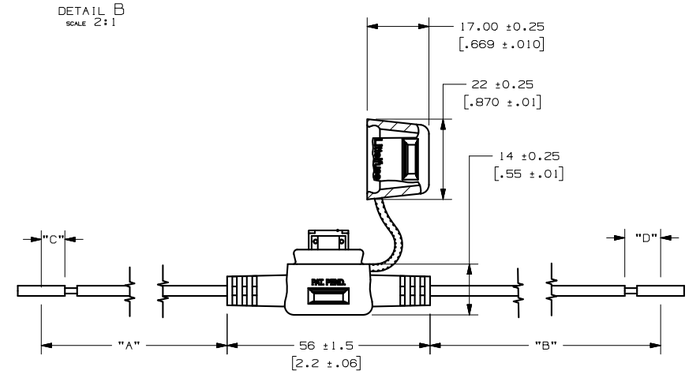

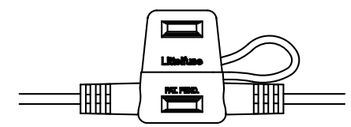

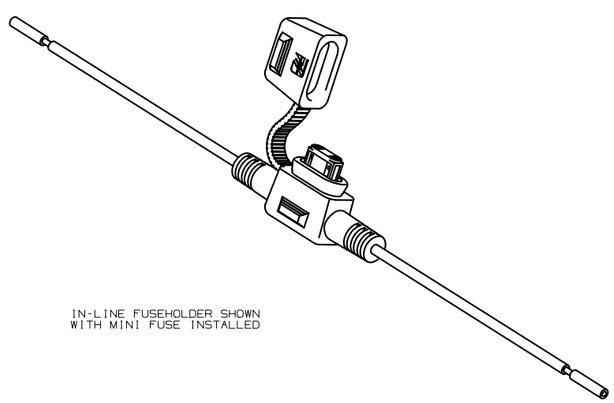

IN-LINE FUSEHOLDER SHOWN
WITH MINI FUSE INSTALLED

NOTES:
1. HOLDER MATERIAL: BLACK TPV 251 80W 232
2. CONTACTS: C194 COPPER ALLOY: TIN-PLATED
3. WIRE: STRANDED COPPER, 125°C RATED, GXL WIRE
4. CRIMP: MUST MEET SAE/USCAR 21 STANDARD
5. FUSEHOLDERS SHOULD NOT BE PLACED UNDER TENSION IN FINAL APPLICATION
6. MAX TEMPERATURE 125°C

UNLESS OTHERWISE SPECIFIED, DIMENSIONS ARE IN MILLIMETERS.
DIMENSIONS IN BRACKETS [ ] ARE INCHES

UNLESS OTHERWISE SPECIFIED, DIMENSIONS DO NOT INCLUDE PLATING.

◎ DENOTES CRITICAL CHARACTERISTICS.

CPK DENOTES CPK DIMENSIONS, -MINIMUM CPK VALUE

ST DENOTES A CHARACTERISTIC THAT PROVIDES AN INDICATION OF PROCESS PERFORMANCE. PROCEDURE FOR MEASUREMENT AND TRACKING TO BE DEFINED IN LITTELFUSE INSPECTION INSTRUCTIONS

CP DENOTES CP DIMENSIONS, -MINIMUM CP VALUE MUST BE WITHIN THE DIMENSIONAL LIMITATIONS SHOWN ON DRAWING AND INITIALLY LOCATED TO ALLOW FOR MAXIMUM TOOL LIFE

C

COPIES TO: 1 9 18 / 2 10 19 / 3 12 20 / 4 13 21 / 5 14 23 / 6 15 33 / 7 16 43 / 8 17 53

MATL SPEC: SEE NOTES

FINISH: SEE NOTES

DRW GMB	DATE 06/30/08	SCALE 1:1
CHK	DATE	SUPER DR
APPD	DATE	FINSH GOOD WT GRAMS/PIECE

TOLERANCE UNLESS OTHERWISE SPECIFIED
ONE PLACE DEC +/-.3 THREE PLACE DEC +/-.100
TWO PLACE DEC +/-.15 ANGULAR +/-1°

3RD ANGLE PROJECTION

TITLE: MINI IN-LINE FUSEHOLDER

METRIC

Littelfuse®
DES PLAINES, ILLINOIS 60016

REVISION: C
DRWG. NO.: 0FHM0000ZXJ-F
SERIES OUTLINE

CAD GENERATED DRAWING – NO PENCIL CHANGES ALLOWED