THIS DRAWING AND THE INFORMATION CONTAINED WITHIN IT ARE CONFIDENTIAL AND MAY NOT BE COPIED OR DISCLOSED WITHOUT THE WRITTEN PERMISSION OF LITTELFUSE.

REVISIONS				
ZONE	REV.	DESCRIPTION	DATE	APPROVED
	A	GCF#524671 INITIAL RELEASE	JUL./28/2021	D. ZHANG

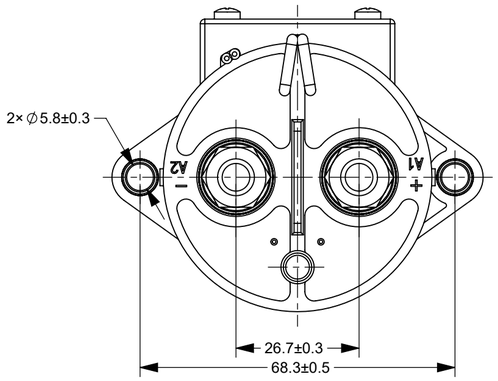

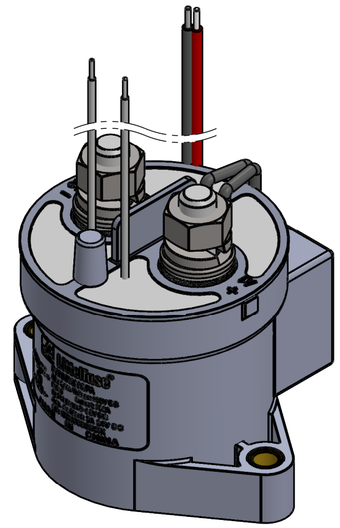

SCHEMATIC CIRCUIT DIAGRAM

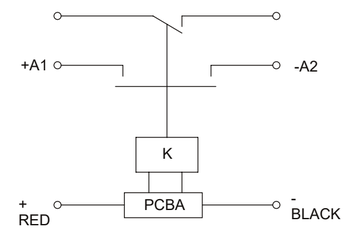

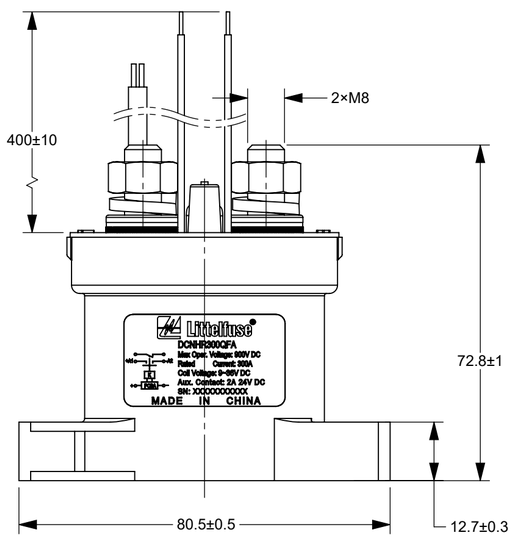

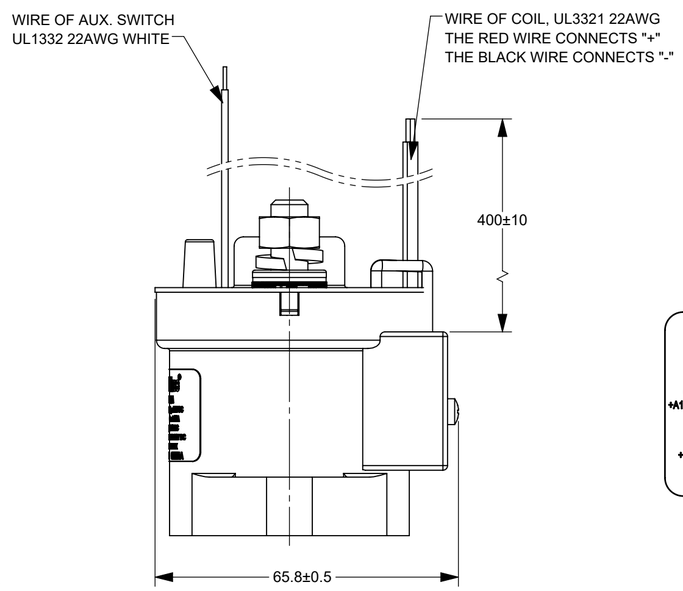

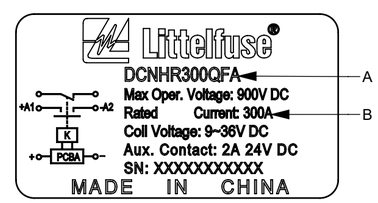

SCALE 2:1

TABLE 1		
MAX OPER. VOLTAGE		900V DC
RATED CONTACT CURRENT	DCNHR150QFA	150A
	DCNHR200QFA	200A
	DCNHR250QFA	250A
	DCNHR300QFA	300A
COIL VOLTAGE		9~36V DC
OPERATING VOLTAGE IN COLD STATE @ (23±5)°C	PICK-UP	9V MAX
	DROP-OUT	6V MIN
OPERATE TIME		25ms
CONTACT BOUNCE TIME		7ms
RELEASE TIME		12ms
MAIN CONTACT RESISTANCE(@ 20A)		≤2mΩ
AUXILIARY CONTACT RESISTANCE(@ 100mA)		≤500mΩ
INSULATION RESISTANCE @ 500 V (INITIAL)		≥100MΩ
DIELECTRIC STRENGTH (LEAKAGE CURRENT≤1 mA)		2200V AC, 1 MINUTE(1000V AC MINUTE, BETWEEN THE AUXILIARY CONTACTS)
ELECTRIC LIFE	DCNHR150QFA	5000 CYCLES (150A @ 450V DC)
	DCNHR200QFA	3500 CYCLES (200A @ 450V DC)
	DCNHR250QFA	1500 CYCLES (250A @ 450V DC)
	DCNHR300QFA	600 CYCLES (300A @ 450V DC)
MECHANICAL LIFE (NO LOAD, CYCLES)		200,000
WORKING DUTY		CONTINUOUS

TABLE 2				
NO.	PN	"A"	"B"	REMARK
1	DCNHR150QFA	DCNHR150QFA	Rated Current: 150A	
2	DCNHR200QFA	DCNHR200QFA	Rated Current: 200A	
3	DCNHR250QFA	DCNHR250QFA	Rated Current: 250A	
4	DCNHR300QFA	DCNHR300QFA	Rated Current: 300A	

NOTES:
1. ALL DIMENSIONS ARE REFERENCE ONLY.
2. SEE TABLE 2 FOR NAME PLATE AND PNs
3. PRODUCT TYPE: SPST-NO, POLAR CONTACTOR WITH AUXILIARY CONTACT;
   AUXILIARY TYPE: SPST-NO.
4. MATERIALS AND FINISH:
4.1 HOUSING: THERMOPLASTIC PLASTICS.
4.2 CONTACTS: COPPER ALLOY.
4.3 CONTACT STUDS: COPPER ALLOY.
4.4 COIL TERMINALS: XLPE INSULATION WIRE(HALOGEN FREE) UL3321 22AWG.
5. MAIN CONTACT M8 STUD, TORQUE: 8~12N•m.
6. MOUNTING: M5 BOLT, RECOMMENDED TORQUE 1.8 N•m ~ 3.5 N•m.
7. CONTACTOR PARAMETERS ARE SHOWN IN TABLE 1.
8. THE COIL AND CONTACT OF THE CONTACTOR ARE POLAR, SO THE CONNECTION OF THE COIL AND CONTACT SHOULD BE OPERATED ACCORDING TO THE SCHEMATIC CIRCUIT DIAGRAM.

DIMENSIONS ARE SHOWN IN MILLIMETERS. DIMENSIONS AND TOLERANCES ARE DEFINED ACCORDING TO ANSI/ASME Y14.5-1994.

PER CHI-NPD20-0008 PROCEDURE

●	FIT/ FUNCTION CRITICAL CHARACTERISTICS
<S>	SAFETY/ COMPLIANCE CRITICAL CHARACTERISTICS SYMBOL
CPK	DENOTES CPK DIMENSIONS MINIMUM CPK VALUE
ST	DENOTES A CHARACTERISTIC THAT PROVIDES AN INDICATION OF PROCESS PERFORMANCE.PROCEDURE FOR MEASUREMENTAND TRACKINGTO BE DEFINED IN LITTELFUSE INSPECTION INSTRUCTIONS
CP	DENOTES CP DIMENSIONS. -MINIMUM CP VALUE MUST BE WITHIN THE DIMENSIONAL LIMITATIONS SHOWN ON DRAWING AND INITIALLY LOCATED TO ALLOW FOR MAXIMUM TOOL LIFE

	NAME	DATE
DRAWN	JY. SHI	JUL./15/2021
CHECKED	J. LI	JUL./21/2021
	-	-
	-	-

FORM NO: CVP-PE40-0005 REV B

THIRD ANGLE PROJECTION

DO NOT SCALE DRAWING

Littelfuse
Expertise Applied | Answers Delivered

TITLE DCNHR 9-36V COIL POLAR CONTACTOR WITH AUXILIARY CONTACT

SIZE C | DWG. NO. OUTLINE OL-DCNHR300QFA, CHARAT | REV. A

SCALE 1:1 | SHEET 1 OF 1