MM	IN
.25	.010
4.00	.630
7.36	1.089
28.44	1.120
20.29	1.980
1.77	0.070

90030-43

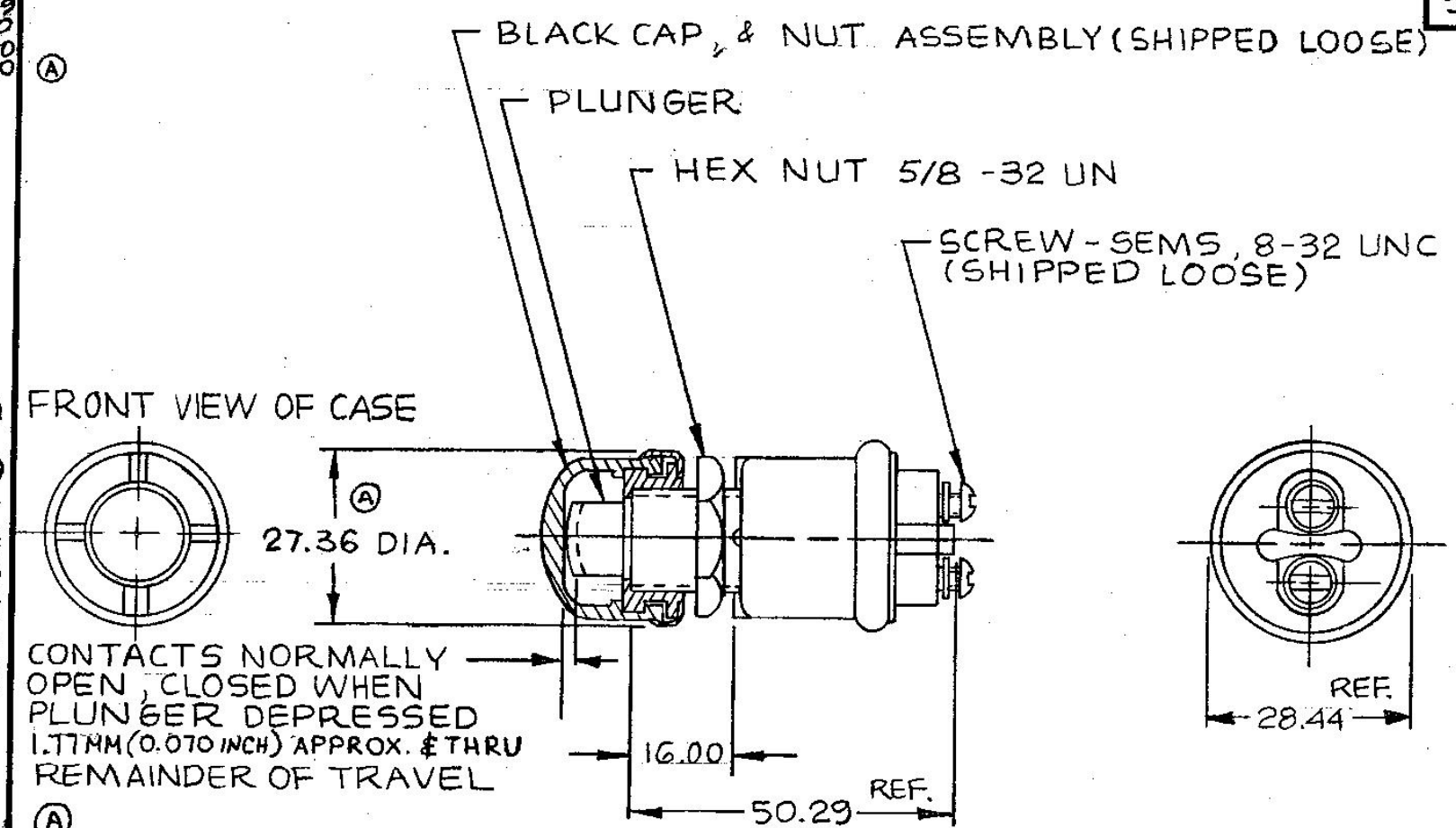

EX 23948-B

NOTE:
1. ALL STEEL PARTS PLATED
2. SILVER CONTACT SURFACES

RATING:
35 AMPS @ 12 VDC
20 AMPS @ 24 VDC

METRIC

Confidential Property of Cole Hersee

DO NOT SCALE

LET.	WAS	DATE	BY	LET	WAS	DATE	BY	MATERIAL	DRAWN	CHECKED	APPRV'D	SCALE	DATE DRAWN
								—	BL	AF		1:1	9-6-90
								FINISH —	Cole Hersee Co. 20 OLD COLONY AVENUE, SOUTH BOSTON, MA U.S.A. 02127				DATE BLUEPRINT
				A	ECN 02323	6/25/02	M.L	TOLERANCES DECIMAL ± METRIC ± .25	MOM. SWITCH NO.				90030-43
					ISSUED	9/11/90	AF						

CH-188(4-78)