CAD GENERATED DRAWING - NO PENCIL CHANGES ALLOWED

PART NUMBER	COVER OPENINGS
04980920ZXT	A D

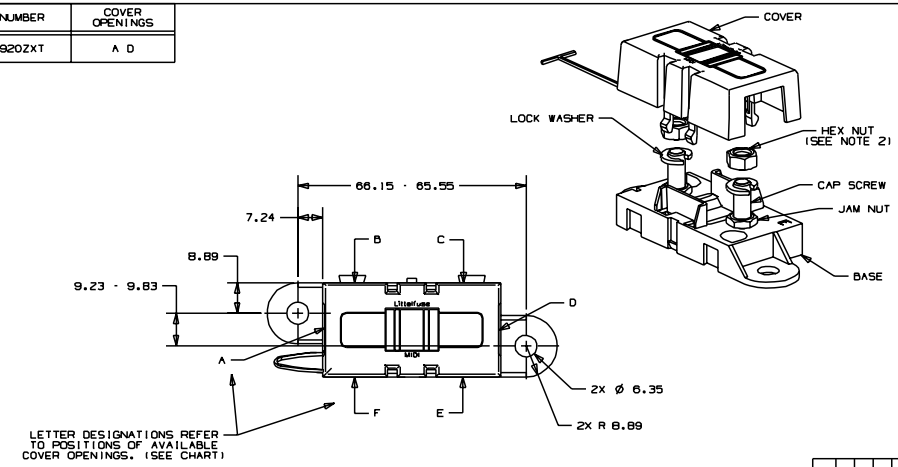

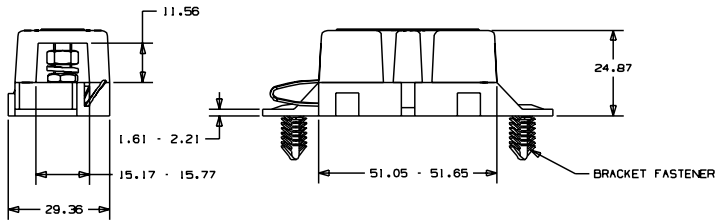

NOTES:

1. TAB COVER TIE IS INSERTED INTO HOLE IN BASE.
2. TORQUE REQUIRED FOR HEX NUT TO BE 4.0 - 5.0 NEWTON METERS (35-44 IN-LBS).

METRIC
ASSEMBLY

UNLESS OTHERWISE SPECIFIED, DIMENSIONS ARE IN MILLIMETERS.
DIMENSIONS IN BRACKETS [ ] ARE INCHES
UNLESS OTHERWISE SPECIFIED, DIMENSIONS DO NOT INCLUDE PLATING.

◎	DENOTES CRITICAL CHARACTERISTICS.
CPK	DENOTES CPK DIMENSIONS. -MINIMUM CPK VALUE
ST	DENOTES A CHARACTERISTIC THAT PROVIDES AN INDICATION OF PROCESS PERFORMANCE. PROCEDURE FOR MEASUREMENT AND TRACKING TO BE DEFINED IN LITTELFUSE INSPECTION INSTRUCTIONS
CP	DENOTES CP DIMENSIONS. -MINIMUM CP VALUE WHICH IS BETWEEN TWO DIMENSIONAL LIMITATIONS SHOWN ON DRAWING AND INITIALLY LOCATED TO ALLOW FOR MAXIMUM TOOL LIFE

NO	COMPONENT NO	DESCRIPTION	QTY/M	U/M

BILL OF MATERIAL

COPIES TO: 1 9 18 / 2 10 19 / 3 12 20 / 4 13 21 / 5 14 23 / 6 15 33 / 7 16 43 / 8 17 53

MATL SPEC
FINISH

DRW	GWB	DATE 01/12/10	SCALE 1:1
CHK		DATE	SUPER DR
APPD		DATE	FINISH GOOD WT

TOLERANCES UNLESS OTHERWISE SPECIFIED (REF. ISO 2768-mK) GRAMS/PIECE

DIMENSION	0.5 - 3	3 - 6	6 - 30	30 - 120	120 - 400
TOLERANCE	±0.1	±0.1	±0.2	±0.3	±0.5

3RD ANGLE PROJECTION

TITLE: HOLDER - MIDI

OUTLINE

DRWG. NO. OL-04980920ZXT

REVISION A

Littelfuse® DES PLAINES, ILLINOIS 60016

LTR	DATE	REVISION	CHK	APD
A	01/12/10	SA73-RELEASE GWB		