THIS DRAWING AND THE INFORMATION CONTAINED WITHIN IT ARE CONFIDENTIAL AND MAY NOT BE COPIED OR DISCLOSED WITHOUT THE WRITTEN PERMISSION OF LITTELFUSE.

| REVISIONS | | | | |
|---|---|---|---|---|
| ZONE | REV. | DESCRIPTION | DATE | APPROVED |
| | A | GCF#524592 INITIAL RELEASE | DEC./03/2021 | D. ZHANG |

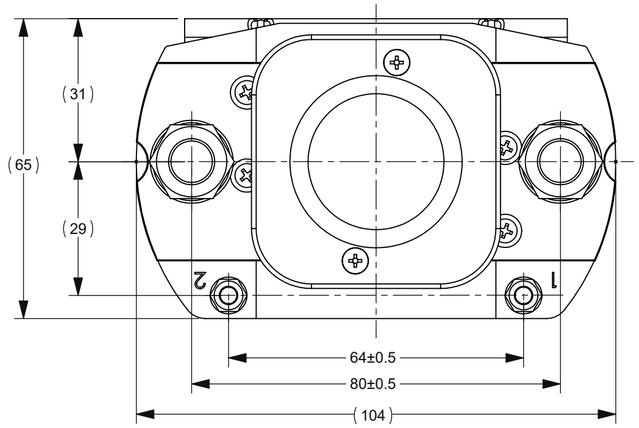


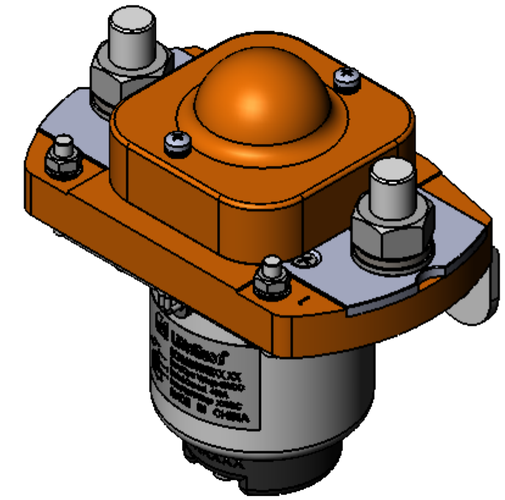

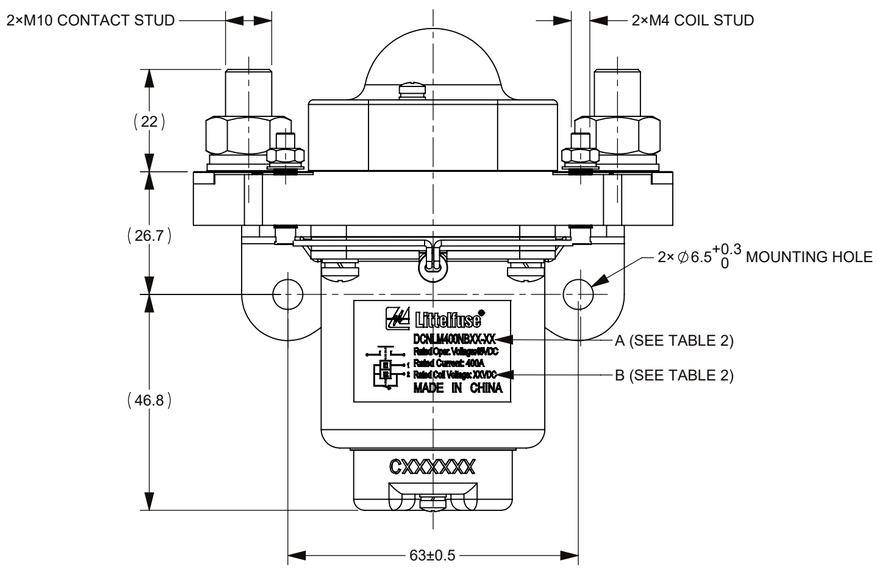


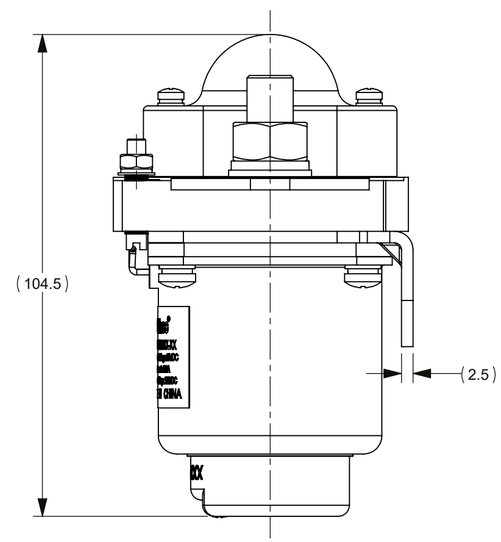


CIRCUIT SCHEMATIC DIAGRAM

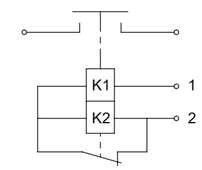


| TABLE 1: TECHNICAL PARAMETERS | | | | |
|---|---|---|---|---|
| ITEM | | PARAMETER | | |
| | | DCNLM400NB12 | DCNLM400NB24-01 | DCNLM400NB48-01 |
| RATED COIL VOLTAGE | | 12V DC | 24V DC | 48V DC |
| HOLD POWER | START POWER | MAX 80W | MAX 175W | MAX 155W |
| | MAINTAIN POWER | MAX 10W | MAX 11.5W | MAX 5W |
| OPERATING VOLTAGE IN COLD STATE AT (20±5)°C | PICKUP | MAX 8.4V DC | MAX 16.8V DC | MAX 33.6V DC |
| | RELEASE | MIN 1V DC | MIN 2V DC | MIN 4V DC |
| OPERATE TIME | | MAX 50ms | | |
| RELEASE TIME | | MAX 20ms | | |
| BOUNCE TIME | | MAX 7ms | | |
| RATED CONTACT VOLTAGE | | 48V DC | | |
| MAXIMUM CONTACT VOLTAGE | | 60V DC | | |
| RATED CONTACT CURRENT | | 400A | | |
| CONTACT VOLTAGE DROP | | ≤50mV@100 A | | |
| LIMIT BREAKING ABILITY | | 4Ie/5ms,1CYCLES | | |
| DIELECTRIC STRENGTH | | 1000V AC, 50Hz,1min., LEAKAGE CURRENT ≤1 mA | | |
| INSULATION RESISTANCE | | ≥50MΩ@500VDC | | |
| ELECTRIC LIFE | | 6000 CYCLES | | |
| MECHANICAL LIFE | | 100,000 CYCLES | | |
| WORKING DUTY | | CONTINUOUS | | |

NOTES:
1. ALL SIZES ARE FOR REFERENCE ONLY.
2. MATERIALS AND FINISHING:
2.1 BASE: THERMOSETTING PLASTIC, UL94V-0.
2.2 CONTACTS: SILVER ALLOY.
2.3 COIL STUD: COPPER ALLY, SILVER PLATED.
3. PRODUCT TECHNICAL PARAMETERS: SEE TABLE 1.
4. PRODUCT AND NAMEPLATE(THE CHARACTER CONTENT AT "A" AND "B")CONFIGURATION SEE TABLE 2.
5. CONTACT ARRANGEMENT: SPST-NO.
6. CONNECTION STUD: M10 STUD, RECOMMENDED TORQUE 15 N•m ~ 18 N•m; M4 STUD, RECOMMENDED TORQUE 1.7 N•m ~ 2.5 N•m.
7. MOUNTING: M6 BOLT, RECOMMENDED TORQUE 6 N•m ~ 8 N•m.

| TABLE 2 | | |
|---|---|---|
| PRODUCT PN | "A" | "B" |
| DCNLM400NB12 | DCNLM400NB12 | Rated Coil Voltage: 12VDC |
| DCNLM400NB24-01 | DCNLM400NB24-01 | Rated Coil Voltage: 24VDC |
| DCNLM400NB48-01 | DCNLM400NB48-01 | Rated Coil Voltage: 48VDC |

DIMENSIONS ARE SHOWN IN MILLIMETERS. DIMENSIONS AND TOLERANCES ARE DEFINED ACCORDING TO ANSI/ASME Y14.5-1994.

PER CHI-NPD20-0008 PROCEDURE

| | |
|---|---|
| ● | FIT/ FUNCTION CRITICAL CHARACTERISTICS |
| <S> | SAFETY/ COMPLIANCE CRITICAL CHARACTERISTICS SYMBOL |
| CPK | DENOTES CPK DIMENSIONS MINIMUM CPK VALUE |
| ⟨ST⟩ | DENOTES A CHARACTERISTIC THAT PROVIDES AN INDICATION OF PROCESS PERFORMANCE.PROCEDURE FOR MEASUREMENTAND TRACKINGTO BE DEFINED IN LITTELFUSE INSPECTION INSTRUCTIONS |
| CP | DENOTES CP DIMENSIONS, -MINIMUM CP VALUE MUST BE WITHIN THE DIMENSIONAL LIMITATIONS SHOWN ON DRAWING AND INITIALLY LOCATED TO ALLOW FOR MAXIMUM TOOL LIFE |

| | NAME | DATE |
|---|---|---|
| DRAWN | MJ. DAI | SEP./20/2021 |
| CHECKED | J. LI | SEP./25/2021 |
| | - | - |
| | - | - |

FORM NO: CVP-PE40-0005 REV B

THIRD ANGLE PROJECTION

DO NOT SCALE DRAWING

Littelfuse
Expertise Applied | Answers Delivered

TITLE
DCNL 400A 48V CONTACTOR

SIZE C | DWG. NO. OUTLINE OL-DCNLM400NB CHART | REV. A

SCALE 1:1 | SHEET 1 OF 1