CAD GENERATED DRAWING - NO PENCIL CHANGES ALLOWED

PART NO.	A	B	C	D	E	F	G	H	J	K	L	M	MAX.TORQUE (in-lb/N-m)	MAX.CURRENT RATING(AMPS)	COLOR
JBPT4P01ZXB	52.4 [2.06]	17.5 [0.69]	11.2 [0.44]	15.9 [0.63]	17.5±0.15 [0.69]	7.9 [0.31]	17.5 [0.69]	1.6 [0.06]	1.6 [0.06]	33.3 [1.31]	5.6[0.22] dia. HOLE w/ 10.4[0.41] dia. C'bore x 3.6[0.14] deep	1/4-20	30 [3.4]	100	BLACK

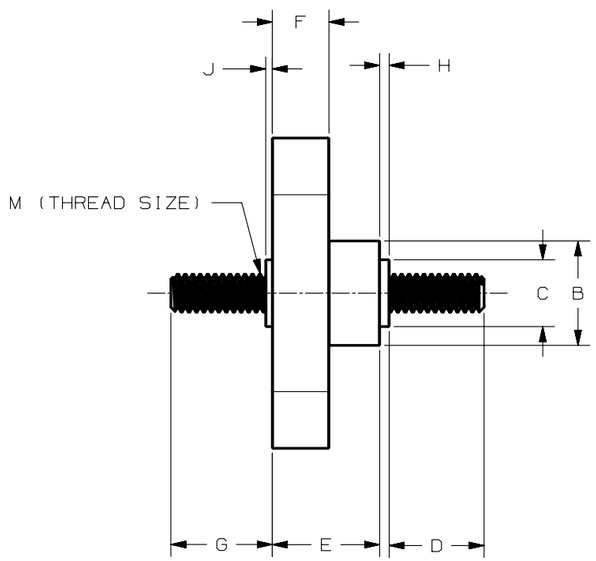

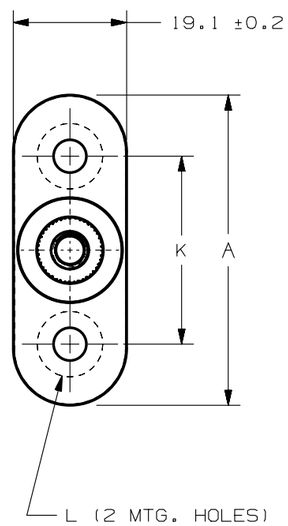

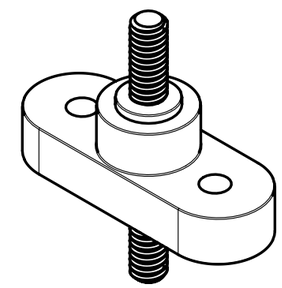

NOTES:

1. ALL DIMENSIONS ARE FOR REFERENCE ONLY.
2. MATERIAL:BODY-> PA66A0520FN-03NC,UL94 V-0
   STUD-> STEEL ZN PLATED
3. MAXIMUM MOUNTING TORQUE 45 IN.LBS (5 N-m)
4. TEMPERATURE RATING: -40°C TO 125°C

METRIC
ASSEMBLY

UNLESS OTHERWISE SPECIFIED, DIMENSIONS ARE IN MILLIMETERS.
DIMENSIONS IN BRACKETS [ ] ARE INCHES
UNLESS OTHERWISE SPECIFIED, DIMENSIONS DO NOT INCLUDE PLATING.

◎ DENOTES CRITICAL CHARACTERISTICS.
CPK DENOTES CPK DIMENSIONS, -MINIMUM CPK VALUE
ST DENOTES A CHARACTERISTIC THAT PROVIDES AN INDICATION OF PROCESS PERFORMANCE. PROCEDURE FOR MEASUREMENT AND TRACKING TO BE DEFINED IN LITTELFUSE INSPECTION INSTRUCTIONS
CP DENOTES CP DIMENSIONS, -MINIMUM CP VALUE MUST BE WITHIN THE DIMENSIONAL LIMITATIONS SHOWN ON DRAWING AND INITIALLY LOCATED TO ALLOW FOR MAXIMUM TOOL LIFE

MATL SPEC: SEE NOTES
FINISH: SEE NOTES

		DATE	SCALE
DRW	N.ROQUE	08/09/10	1:1
CHK		DATE	SUPER DR
APPD		DATE	FINISH GOOD WT GRAMS/PIECE

TOLERANCES UNLESS OTHERWISE SPECIFIED (REF. ISO 2768-fH)

DIMENSION	UP TO 3	OVER 3 UP TO 6	OVER 6 UP TO 30	OVER 30 UP TO 120	OVER 120 UP TO 400
TOLERANCE	±0.05	±0.05	±0.1	±0.15	±0.2

COPIES TO: 1 9 18, 2 10 19, 3 12 20, 4 13 21, 5 14 23, 6 15 33, 7 16 43, 8 17 53

TITLE: JUNCTION BLOCKS 1/4"-20 (PASS-THRU)

3RD ANGLE PROJECTION

Littelfuse® LIPA CITY, BATANGAS, PHILIPPINES

REVISION: B
DRWG. NO.: OL-JBPT4
OUTLINE

LTR	DATE	REVISION	CHK	APD
A	5/2/11	502161ERA-RELEASED NR		
B	7/29/13	509321ERA STUD UNIFY ZPENG		