90000-01

MM	IN
1.52	0.059
3.04	0.119
9.65	0.380
11.04	0.434
11.20	0.441
17.02	0.670
28.44	1.118
50.18	1.981

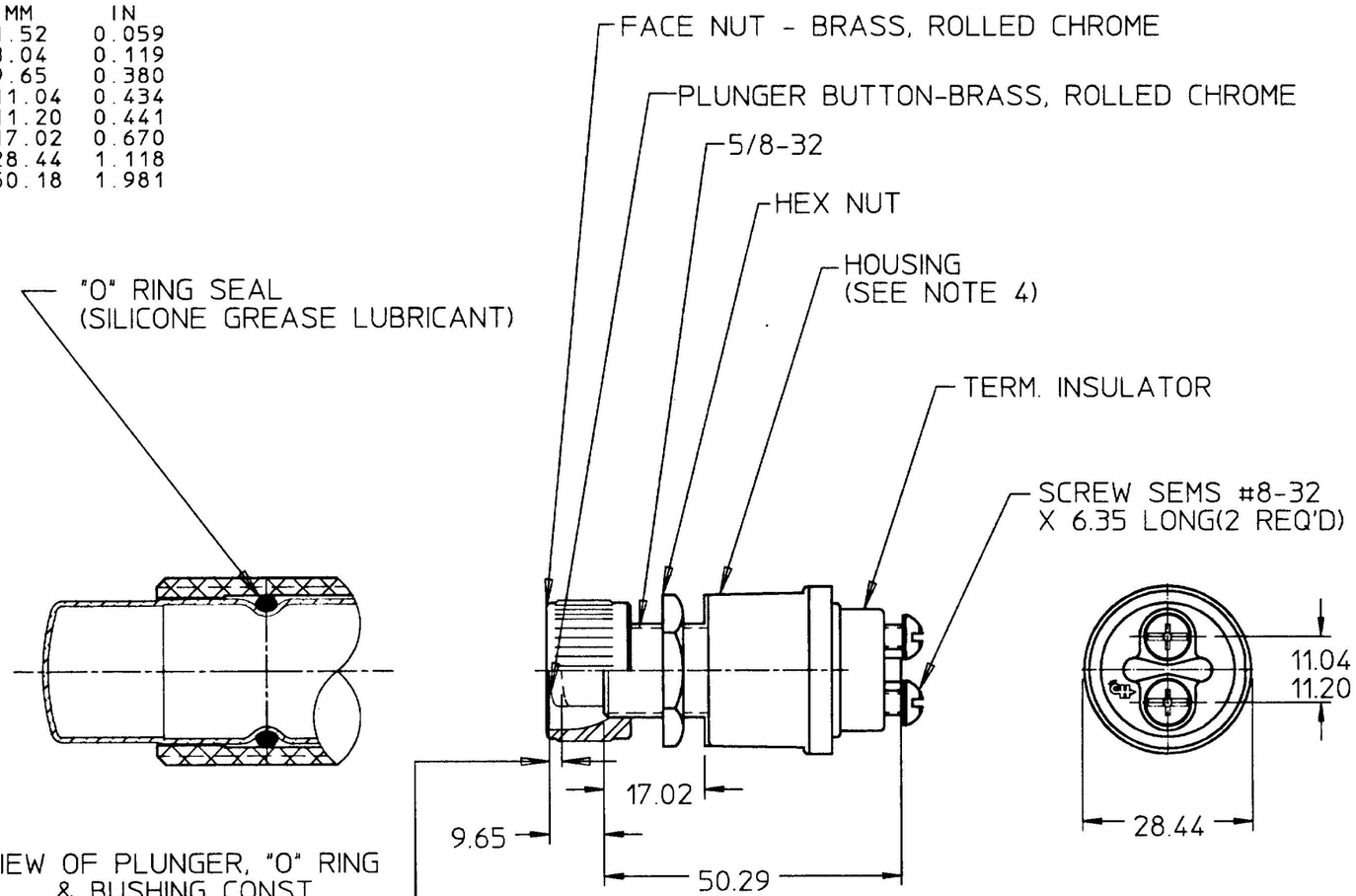

VIEW OF PLUNGER, "O" RING
& BUSHING CONST
SCALE 2:1

NORMALLY OPEN-CONTACTS
CLOSED WHEN PLUNGER
DEPRESSED 1.52/3.04 THRU
REMAINDER OF TRAVEL

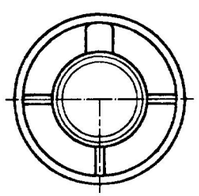

FRONT VIEW
OF CASE

NOTES:
1. SOLID SILVER RIVET STATIONARY
   CONTACT, SILVER LAMINATED MOVING CONTACT
2. NUMBER OF POLES: 1
   NUMBER OF THROWS: 1
3. SEALING:
   "O" RING SEAL BETWEEN PLUNGER
   AND MOUNTING STEM
4. HOUSING: ZINC DIE CAST-60-DEEP
   DICHROMATE DIP
5. ALL STEEL PARTS EITHER ZINC PLATED
   WITH DICHROMATE DIE OR CADMIUM PLT
6. RATING:
   12V DC: RESISTIVE 35 AMPS
   INDUCTIVE 30 AMPS
   24V DC: RESISTIVE 20 AMPS
   INDUCTIVE 18 AMPS
7. LIFE @ RATED CURRENT
   MAKE AND BREAK
   12V & 24V-100,000 MIN.
8. ALL DIMENSION REFERENCE ONLY UNLESS
   NOTED OTHERWISE

DO NOT SCALE

LET.	WAS	DATE	BY	LET.	WAS	DATE	BY
				M	ECN #00381	05/09/00	MK
				L	PUT ON CAD	05/05/00	MK
				--	ISSUED	02/06/77	TR

MATERIAL	DRAWN	CHK	APVD	SCALE	90000 W/SPEC. FACE NUT	DATE DRAWN
N/A	KG	DAS	N/A	1:1		02/03/67
FINISH N/A	Cole Hersee Co. 20 OLD COLONY AVENUE, BOSTON, MA., U.S.A., 02127					DATE BLUEPRINTED
TOLERANCES DECIMAL ± N/A ANGLE ± N/A	START SWITCH					90000-01

METRIC

Confidential Property of Cole Hersee