THIS DRAWING AND THE INFORMATION CONTAINED WITHIN IT ARE CONFIDENTIAL AND MAY NOT BE COPIED OR DISCLOSED WITHOUT THE WRITTEN PERMISSION OF LITTELFUSE.

REVISIONS

REV.	DESCRIPTION	DATE	DESIGNED	APPROVED
A	First issue of outline drawing	22-Jan-21	L.Dal Molin	M.Tinto
B	Note added	26-Mar-21	L.Dal Molin	M.Tinto

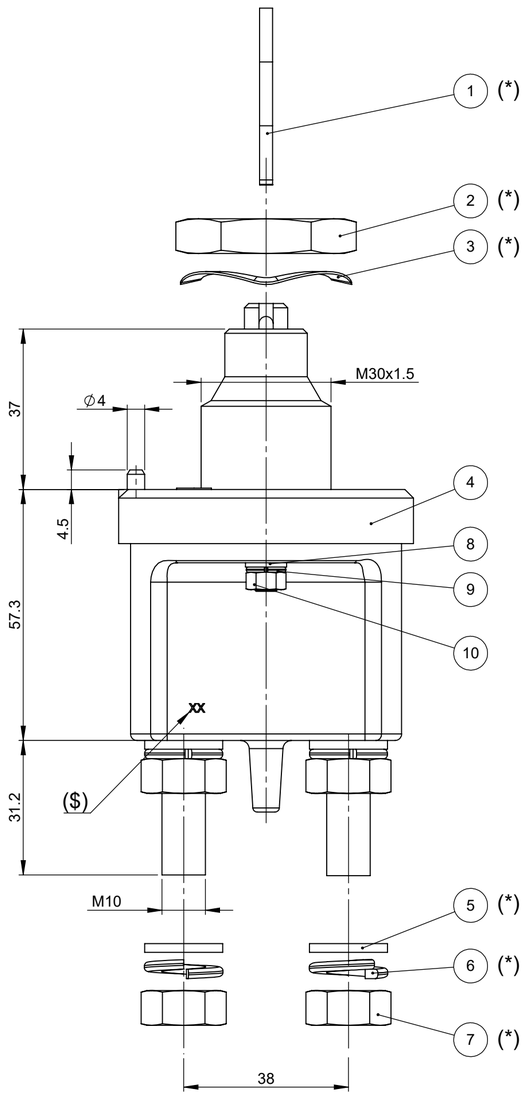

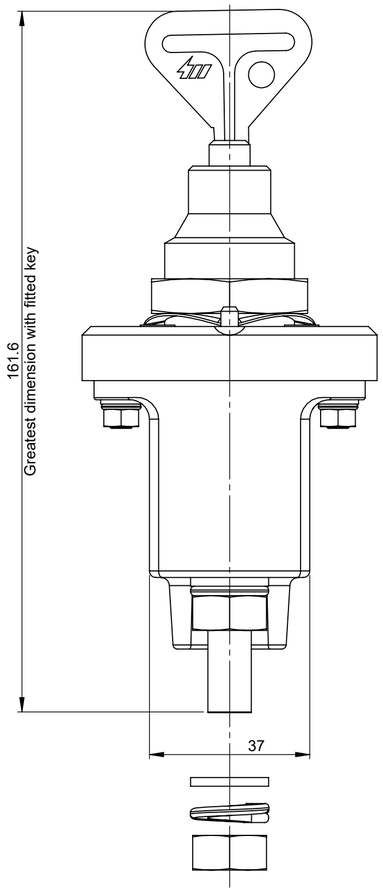

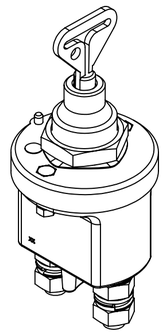

POS.	P/N	DESCRIPTIONS	MATERIAL	Q.TY	U/M
10		Nut M5	Steel	2	EA
9		Grower washer To 5	Steel	2	EA
8		Plane washer Tc 5.3x9.5	Steel	2	EA
7		Nut M10	Brass	2	EA
6		Grower washer B10	Bronze	2	EA
5		Plane washer 10.3x18	Brass	2	EA
4		Complete switch		1	EA
3		Elastic ring	Steel	1	EA
2		Nut M30x1.5	Brass	1	EA
1		Key	Steel	1	EA

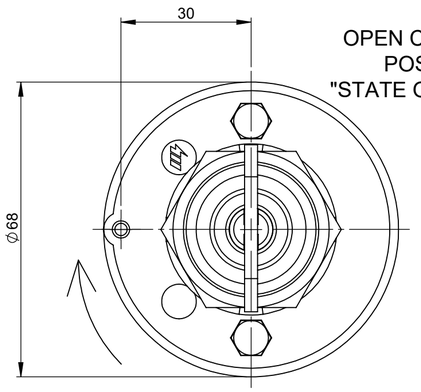

OPEN CONTACTS POSITION "STATE OF SUPPLY"

FIXING HOLES

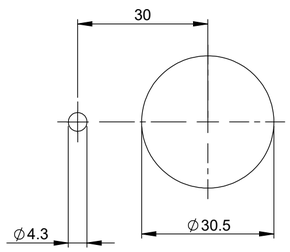

ELECTRICAL DIAGRAM

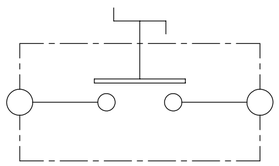

PRESCRIPTIONS
- Contacts lock by 90° clockwise rotation of key
- ($) Marking of manufacturing date, indifferently on right or left terminal
- (*) Key, nut M30x1.5, elastic ring, nuts and washers supplied in the kit

CHARACTERISTICS
- Max operating voltage: 24 DC
- Max continuous current: 250A
- Intermittent current: 2500A at 3 sec.
- Handle operating torque: 1.5(±0.5) Nm
- M10 nut closing pair: 19(±3) Nm
- M5 nut closing pair: 1.5(±0.5) Nm
- Locking nut M30x1.5: 35(±5) Nm
- Maximum thickness lockable with nut M30: 12mm
- (B) - Key operating torque: 2±0.5 Nm

SAP drawing number: 10000106316

Material and treatments:

DIMENSIONS AND TOLERANCES IN MILLIMETERS, DEFINED ACCORDING TO ISO 1101-2017.

linear dimensions						
0,5 3	>3 6	>6 30	>30 120	>120 400	>400 1000	>1000 2000
±0,2	±0,3	±0,5	±0,8	±1,2	±2	±3

angle (for range of lengths)			
up to 10	>10 50	>50 120	>120 400
±1°30'	±1°	±0°30'	±0°15'

●	FIT/ FUNCTION CRITICAL CHARACTERISTICS SYMBOL
<S>	SAFETY/ COMPLIANCE CRITICAL CHARACTERISTICS SYMBOL
CPK	DENOTES CPK DIMENSIONS MINIMUM CPK VALUE
⟨ST⟩	DENOTES A CHARACTERISTIC THAT PROVIDES AN INDICATION OF PROCESS PERFORMANCE PROCEDURE FOR MEASUREMENTAND TRACKINGTO BE DEFINED IN LITTELFUSE INSPECTION INSTRUCTIONS
CP	DENOTES CP DIMENSIONS, -MINIMUM CP VALUE MUST BE WITHIN THE DIMENSIONAL LIMITATIONS SHOWN ON DRAWING AND INITIALLY LOCATED TO ALLOW FOR MAXIMUM TOOL LIFE

	NAME	DATE
DRAWN	L. Dal Molin	22-Jan-21
CHECKED	-	-
	-	-
	-	-

Littelfuse
Expertise Applied | Answers Delivered

FORM NO: CVP-PE40-0013 REV A

FIRST ANGLE PROJECTION

TITLE
250 A MANUAL BATTERY MASTER SWITCH WITH REMOVABLE KEY

SIZE: A2 | DWG. NO. OUTLINE OL-08098300 | REV. B

DO NOT SCALE DRAWING | SCALE 1:1 | SHEET 1 OF 1