CURREN RATE [A]	VERSIONS AND PART NUMBERS
2	0997002.WXN
3	0997003.WXN
4	0997004.WXN
5	0997005.WXN
7.5	099707.5WXN
10	0997010.WXN
15	0997015.WXN
20	0997020.WXN
25	0997025.WXN
30	0997030.WXN

LTR	DATE	REVISION	DRW
A	01/FEB/23	526135GCA - INITIAL RELEASE	OPL

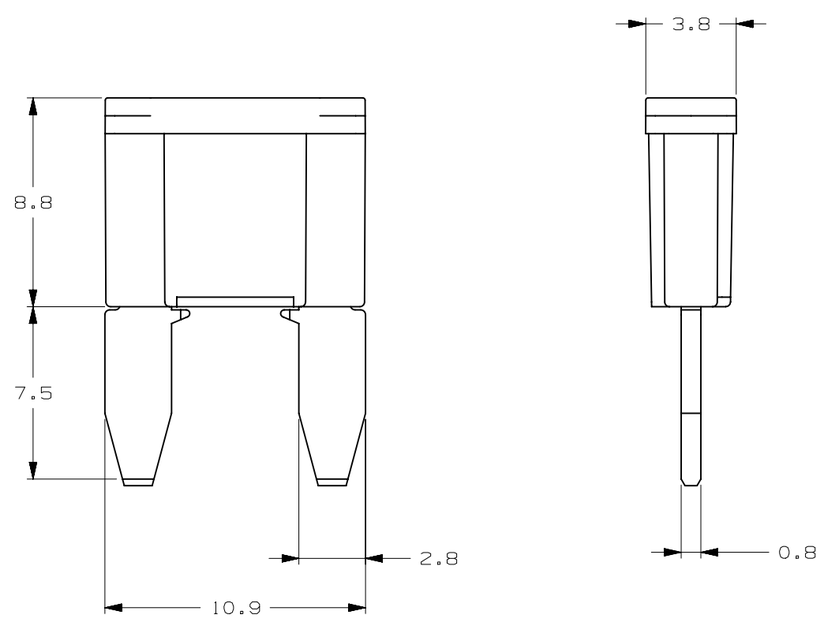

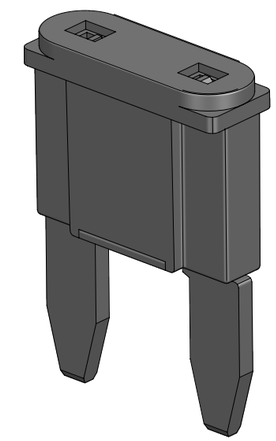

ISOMETRIC VIEW

MINI 58V	
TERMINAL MATERIAL:	ZINC ALLOY
TERMINAL PLATING:	SILVER
HOUSING MATERIAL:	PA66 (U.L. 94 FLAMMABILITY RATING V-2)

LINEAR DIMENSIONS					ANGLES	RADII
DIM	.5 - 6	6 - 30	30 - 120	120 - 400	±0.5°	±0.2
TOL	±0.1	±0.2	±0.3	±0.5		

3RD ANGLE PROJECTION

Littelfuse®
CHICAGO, USA 773-628-1000

REVISION: A

DRWG. NO. WEB-0997000.WXN