COVER OPENING POSITIONS
D F

LTR	DATE	REVISION	CHK	APD
A	10/20/08	000525ER- CREATED PRINT GMB		

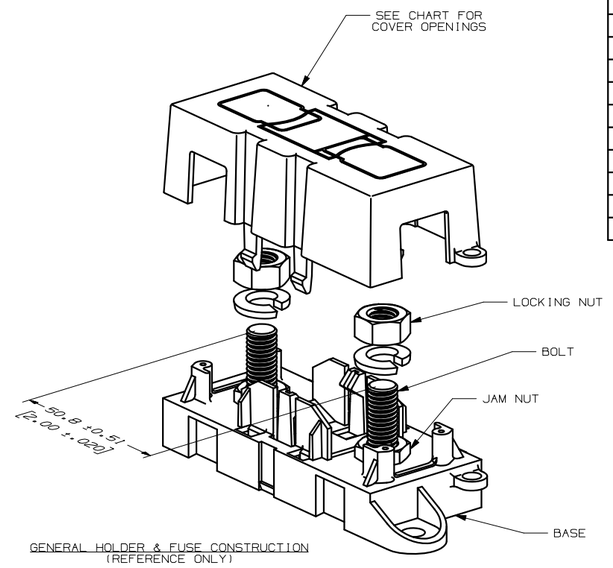

GENERAL HOLDER & FUSE CONSTRUCTION
(REFERENCE ONLY)

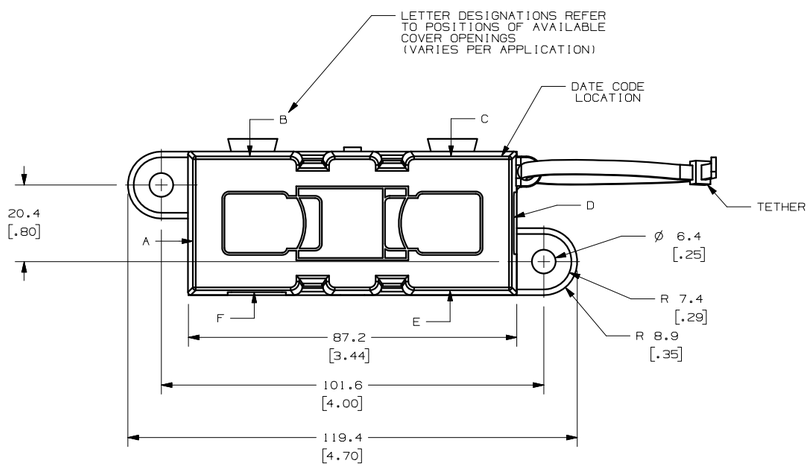

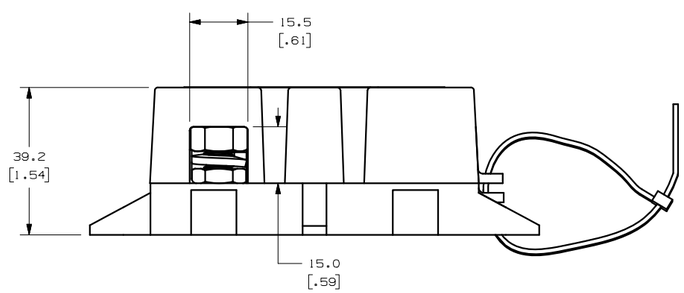

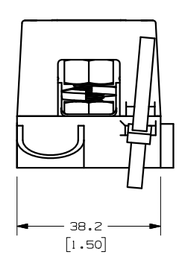

GENERAL NOTES:

1. COVER RETENTION TEST A MINIMUM FORCE OF 2 LBS. IS REQUIRED TO REMOVE COVER WHEN IT IS SUSPENDED UPSIDE DOWN. FORCE SHALL BE APPLIED THROUGH THE INNER HOLES (2) IN BASE. USE FIXTURE #T-C403 TO SUPPORT PART.
2. TORQUE REQUIREMENT FOR MEGA FUSE TERMINAL & CONNECTOR LOCKING NUTS TO BE: 8mm NUT - 12-18 NEWTON METERS [106-159 IN-LBS].
3. HOLDER MEETS L/F VALIDATION TEST SPEC. VS-005002.

MATERIALS:

* BODY - GLASS FILLED THERMOPLASTIC
  COLOR - BLACK
* COVER - THERMOPLASTIC
  COLOR - BLACK
* WIRE TIE - THERMOPLASTIC
  COLOR - BLACK
* STUDS & NUTS - M8 X 1.25 STEEL
  ZINC PLATE WITH TRIVALENT CHROMATE, LEACHED AND SEALED, INTEGRAL TORQUE CONTROL LUBRICANT FINISH.
  (MEETS 96 HR. ASTM STD, B-117 SALT SPRAY REQ.)

METRIC

NO	COMPONENT NO	DESCRIPTION	QTY/M	U/M

BILL OF MATERIAL

UNLESS OTHERWISE SPECIFIED, DIMENSIONS ARE IN MILLIMETERS. DIMENSIONS IN BRACKETS [ ] ARE INCHES

UNLESS OTHERWISE SPECIFIED, DIMENSIONS DO NOT INCLUDE PLATING.

◎	DENOTES CRITICAL CHARACTERISTICS.
CPK	DENOTES CPK DIMENSIONS, -MINIMUM CPK VALUE
⟨ST⟩	DENOTES A CHARACTERISTIC THAT PROVIDES AN INDICATION OF PROCESS PERFORMANCE. PROCEDURE FOR MEASUREMENT AND TRACKING TO BE DEFINED IN LITTELFUSE INSPECTION INSTRUCTIONS
CP	DENOTES CP DIMENSIONS, -MINIMUM CP VALUE MUST BE WITHIN THE DIMENSIONAL LIMITATIONS SHOWN ON DRAWING AND INITIALLY LOCATED TO ALLOW FOR MAXIMUM TOOL LIFE

COPIES TO

1	9	18
2	10	19
3	12	20
4	13	21
5	14	23
6	15	33
7	16	43
8	17	53

MATL SPEC

FINISH

DRW GMB	DATE 10/20/08	SCALE FULL
CHK	DATE	SUPER DR
APPD	DATE	FINSH GOOD WT GRAMS/PIECE

TOLERANCE UNLESS OTHERWISE SPECIFIED
ONE PLACE DEC +/-.3
TWO PLACE DEC +/-.15
THREE PLACE DEC +/-.100
ANGULAR +/-1°

3RD ANGLE PROJECTION

TITLE MEGAFUSE HOLDER

Littelfuse®
DES PLAINES, ILLINOIS 60016

REVISION	DRWG. NO.	OUTLINE
A	02981024ZXT	

CAD GENERATED DRAWING – NO PENCIL CHANGES ALLOWED