1235

MM	IN
4.75	0.187
6.73	0.265
19.84	0.781
29.36	1.156
30.15	1.187
44.45	1.750
58.72	2.312
74.60	2.937
95.25	3.750

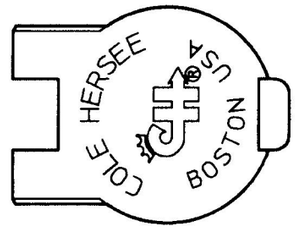

FRONT VIEW OF DOOR

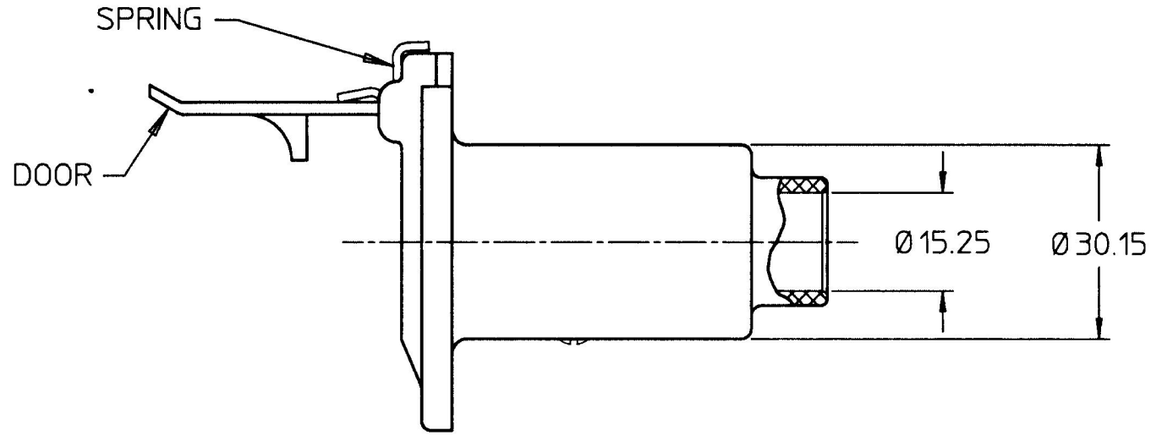

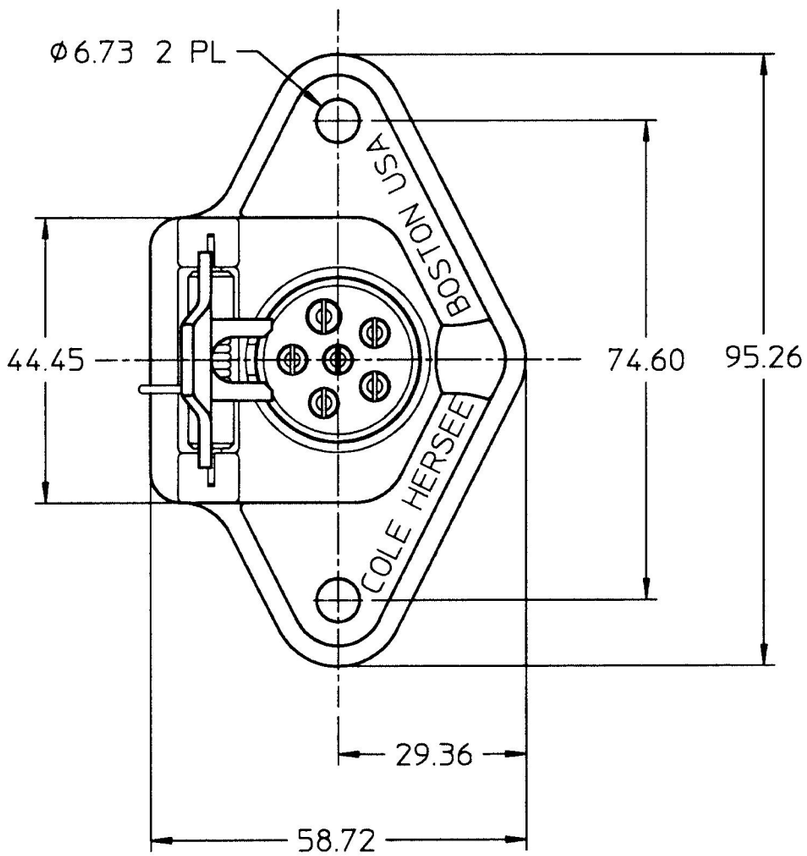

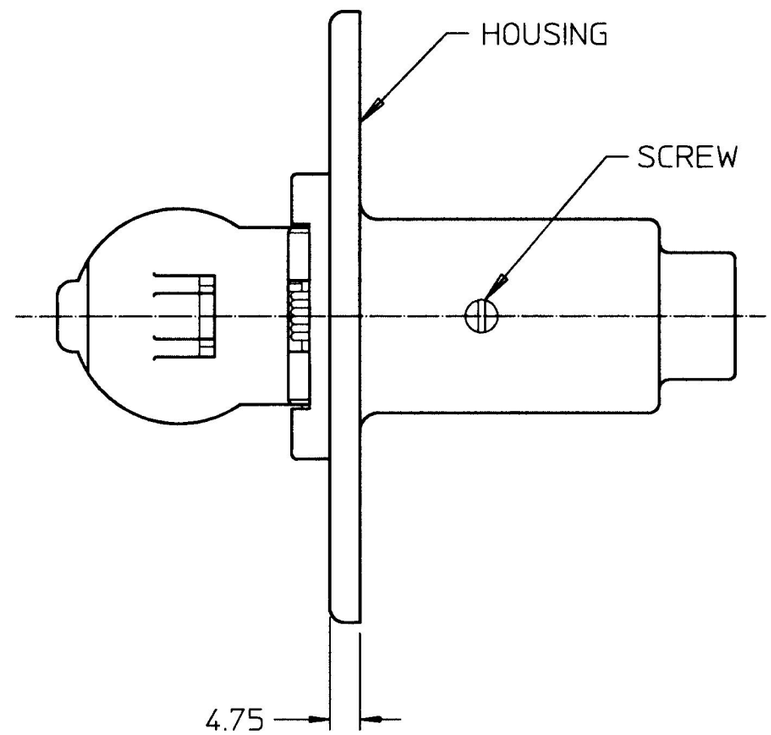

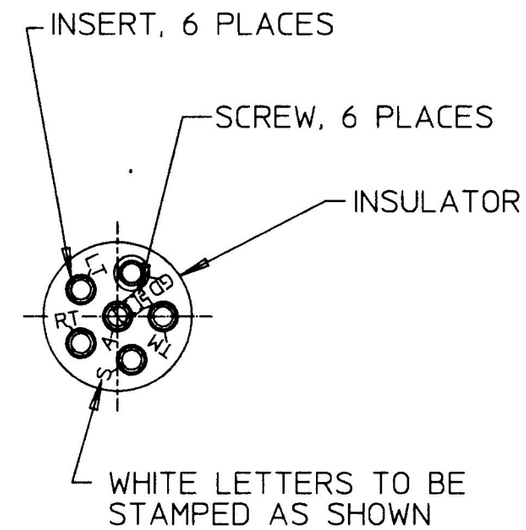

BACK VIEW OF INSULATOR

NOTE:
1. ALL STEEL PARTS PLATED
2. ALL DIMENSIONS ARE REFERENCE ONLY
3. DOOR SHOWN OPEN FOR CLARITY

GR	GROUND
TM	TAIL AND MARKER
S	STOP LAMP
RT	RIGHT TURN SIGNAL
LT	LEFT TURN SIGNAL
A	DOME AND ACCESSORY
TERMINAL MARKINGS	

METRIC

DO NOT SCALE

LET.	WAS	DATE	BY	LET.	WAS	DATE	BY
				H	PUT ON CAD	2/10/98	JMP

MATERIAL	DRAWN	CHK	APVD	SCALE		DATE DRAWN
	VP	DB		1:1		7/12/50
FINISH	Cole Hersee Co. 20 OLD COLONY AVENUE, BOSTON, MA., U.S.A., 02127					DATE BLUEPRINTED
TOLERANCES DECIMAL ± ANGLE ±	6 WAY TRAILER CONNECTOR ASEMBLY					1235

Confidential Property of Cole Hersee