REVISIONS				
ZONE	REV.	DESCRIPTION	DATE	APPROVED
	A	Per EC# 515700: INITIAL RELEASE	3/22/2016	J. LIU
	B	PER EC#515935: ADDED A PERPENDICULARITY CALLOUT	5/26/2016	J. LIU

NOTES: (UNLESS OTHERWISE SPECIFIED)

1. ASSOCIATED CAD FILE DEFINES ALL NONDIMENSIONED FEATURES

2. PRODUCT WEIGHT: 0.18 Kg

3. MAXIMUM TERMINAL STUD TORQUE: 13.56 NM (120IN-LB)

4. FRONT PANEL MOUNT IN 67MM (2-5/8") HOLE

5. TERMINAL HARDWARE: 3/8"-16 NUT SERRATED FLANGE, STAINLESS STEEL

6. REAR PANEL MOUNT IN 60MM [2-3/8"] HOLE

7. REAR PANEL MOUNT HEX FEATURE FOR #10 NUTS

8. ELECTRICAL SPECIFICATOIN:
   - MAX OPERATING VOLTAGE: 32V DC
   - MAX CONTINUOUS CURRENT: 300A
   - CRANKING RATING (30 SEC) (1X4/0 CABLE): 1,250A

9. INGRESS RATING: IP67 & IP69K

10. IGNITION PROTECTION: MEETS ISO 8846 7 SAE J1171

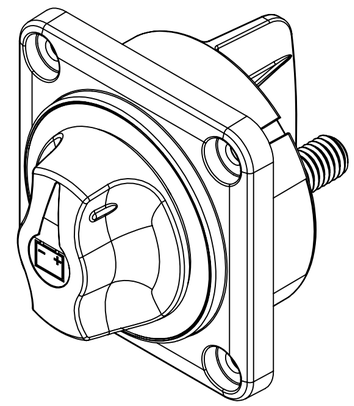

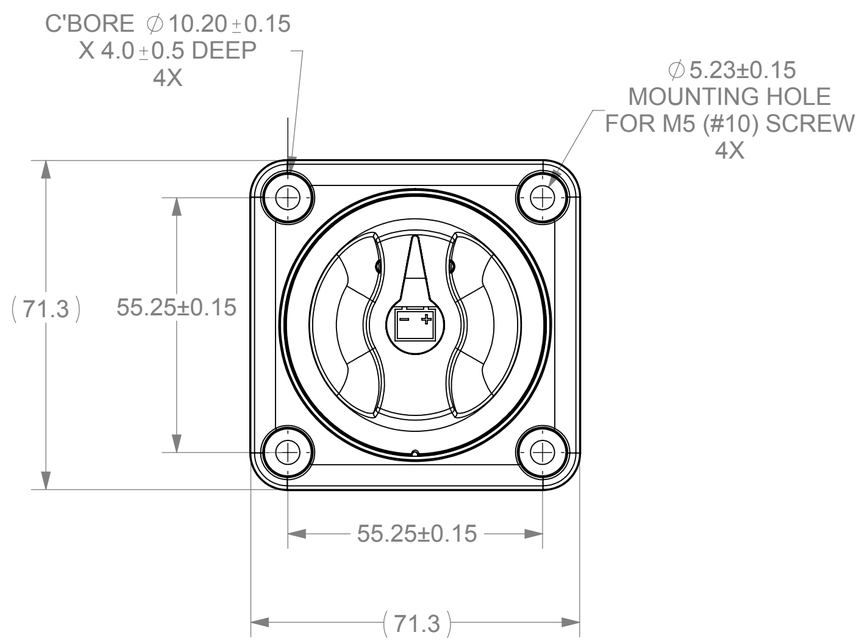

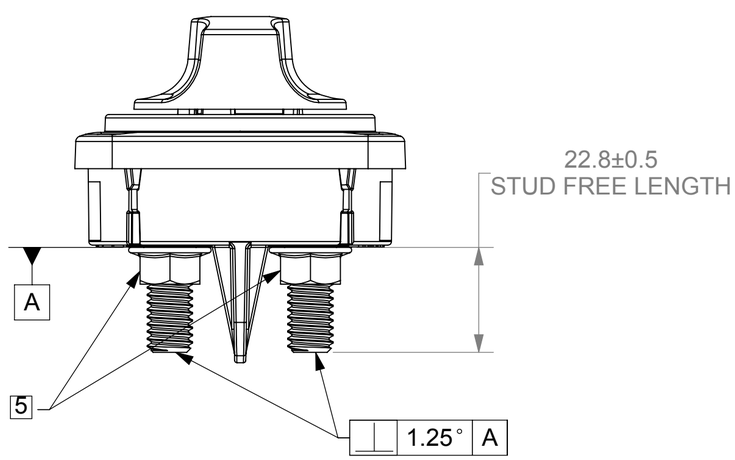

DIMENSIONS ARE IN MM.

DIMENSIONS AND TOLERANCES ARE DEFINED ACCORDING TO ANSI / ASME Y14.5M-1994

THIS DRAWING AND THE INFORMATION CONTAINED WITHIN IT ARE CONFIDENTIAL AND MAY NOT BE COPIED OR DISCLOSED WITHOUT THE WRITTEN PERMISSION OF LITTELFUSE.

	NAME	DATE
DRAWN	J. LIU	11/15/2013
CHECKED	-	-
-	-	-
-	-	-
-	-	-

THIRD ANGLE PROJECTION

Littelfuse
Expertise Applied | Answers Delivered
805 W. ORCHARD DR., STE. 6, BELLINGHAM, WA 98225
Phone (360)738-9010 Fax (360)738-0372

Switch Master Panel Mt

SIZE	DWG. NO.	REV.
C	OL-880062	B

SCALE 1:1 SHEET 1 OF 1