MM	IN
6.35	0.250
10.03	0.395
10.20	0.401
10.67	0.420
12.44	0.490
20.63	0.816
27.18	1.070
42.67	1.680
55.37	2.180

84251

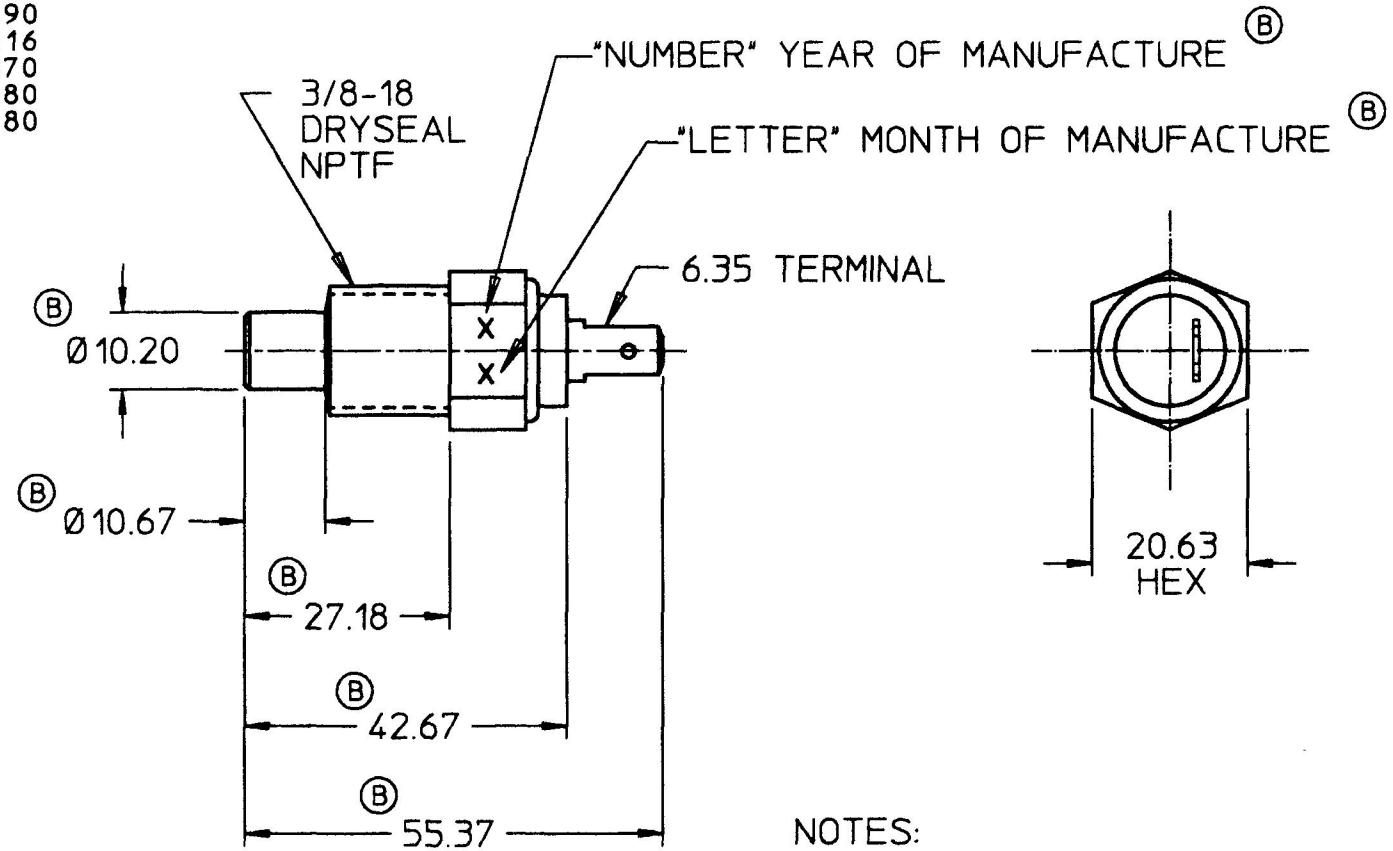

NOTES:
1. SWITCH MAKES CONTACT @ 200°F ± 10°F
2. ALL DIMENSIONS ARE REFERENCE
(B) 3. INSULATOR MATERIAL: NYLON
(C) (B) 4. NUMBER 3750 METAL STAMPED ON ANY HEX FLAT

METRIC

DO NOT SCALE

LET.	WAS	DATE	BY	LET.	WAS	DATE	BY	MATERIAL	DRAWN	CHK	APVD	SCALE		DATE DRAWN
									JRF			1:1		03/06/92
								FINISH	Cole Hersee Co. 20 OLD COLONY AVENUE, BOSTON, MA., U.S.A., 02127					DATE BLUEPRINTED
				C	99212	06/28/99	WL							
				B	PUT ON CAD PER ECN #99149	04/15/99	GA	TOLERANCES	TEMP SWITCH					84251
					ISSUED	03/06/92	AF	DECIMAL ± ANGLE ±						

Confidential Property of Cole Hersee