MM	IN
.96	.038
1.82	.072
9.52	.375
19.05	.750
30.86	1.215
34.92	1.375

54100

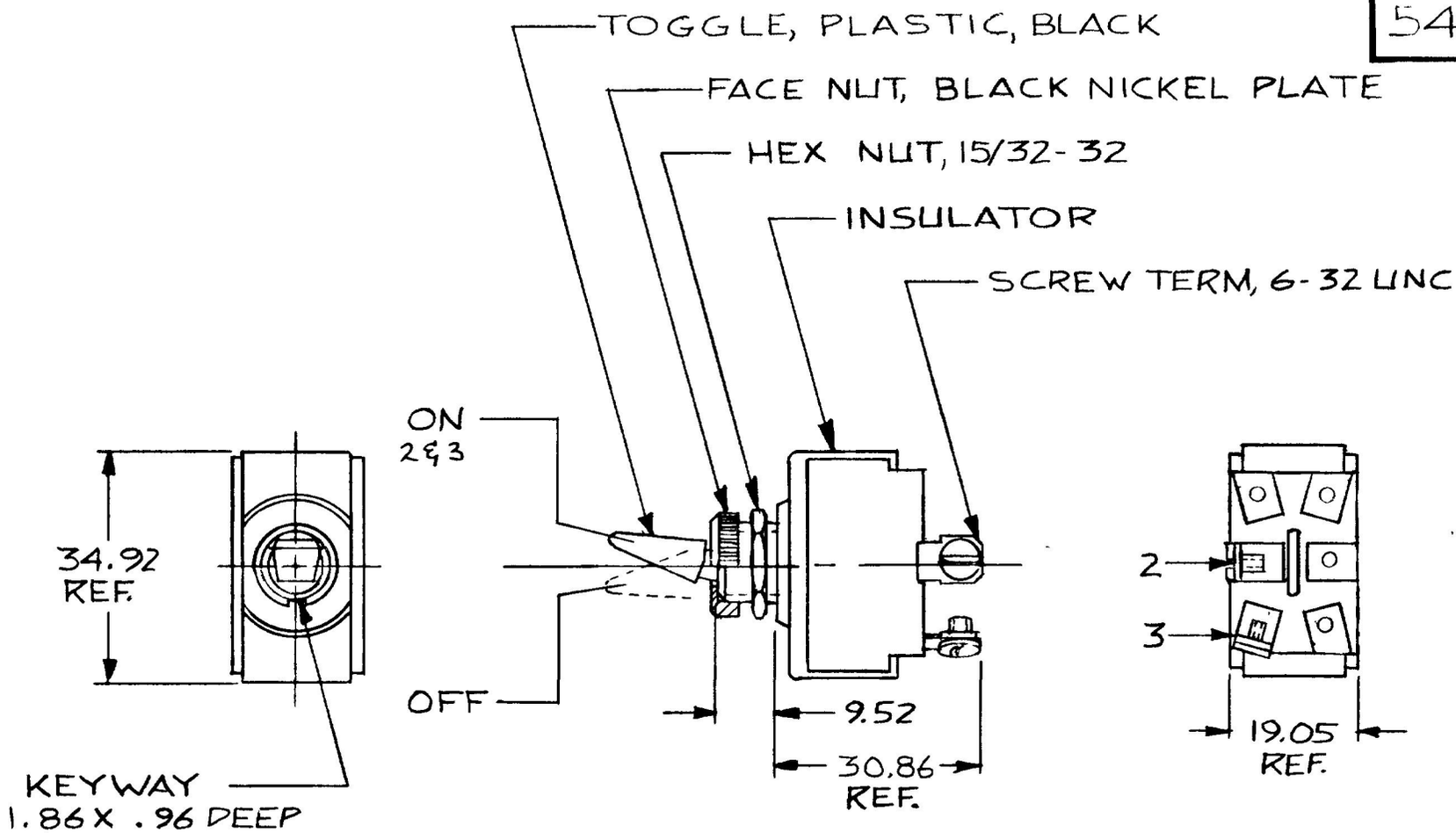

NOTES
1. SILVER CONTACTS
2. RATING: 25 AMPS @ 12V. D.C. LAMP LOAD

METRIC

DO NOT SCALE

LET	WAS	DATE	BY	LET	WAS	DATE	BY
					ISSUED	11-2-81	RJM

MATERIAL	DRAWN	CHECKED	APPRV D	SCALE		DATE DRAWN
—	DPS	RJA		1:1		10-5-81
FINISH —	Cole Hersee Co. 20 OLD COLONY AVENUE SOUTH BOSTON MA U.S.A. 02127					DATE BLUEPRINT
TOLERANCES DECIMAL ±.010 METRIC ±.25	S.P.S.T. TOGGLE SW.					54100

CH-188(4-78)

Confidential Property of Cole Hersee