PL-36

CHART

MM	IN	MM	IN
4.57	0.178	101.60	4.000
5.59	0.220	203.20	8.800
9.65	0.380	215.90	8.500
9.90	0.390	457.20	18.000
15.24	0.600	0.8mm²	18 GA
19.05	0.750	1.0mm²	16 GA
25.40	1.000	2.0mm²	14 GA
215.90	8.500		
228.60	9.000		

METRIC

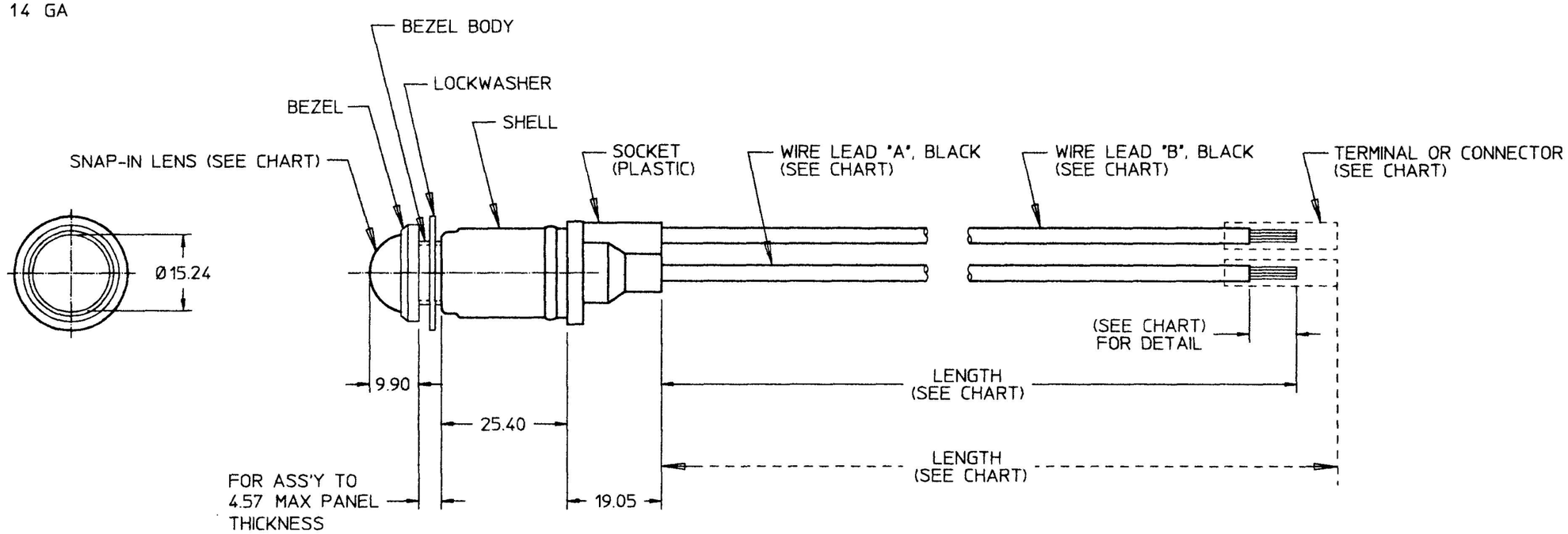

DETAIL C

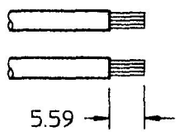

DETAIL B

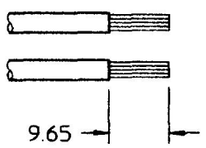

DETAIL A

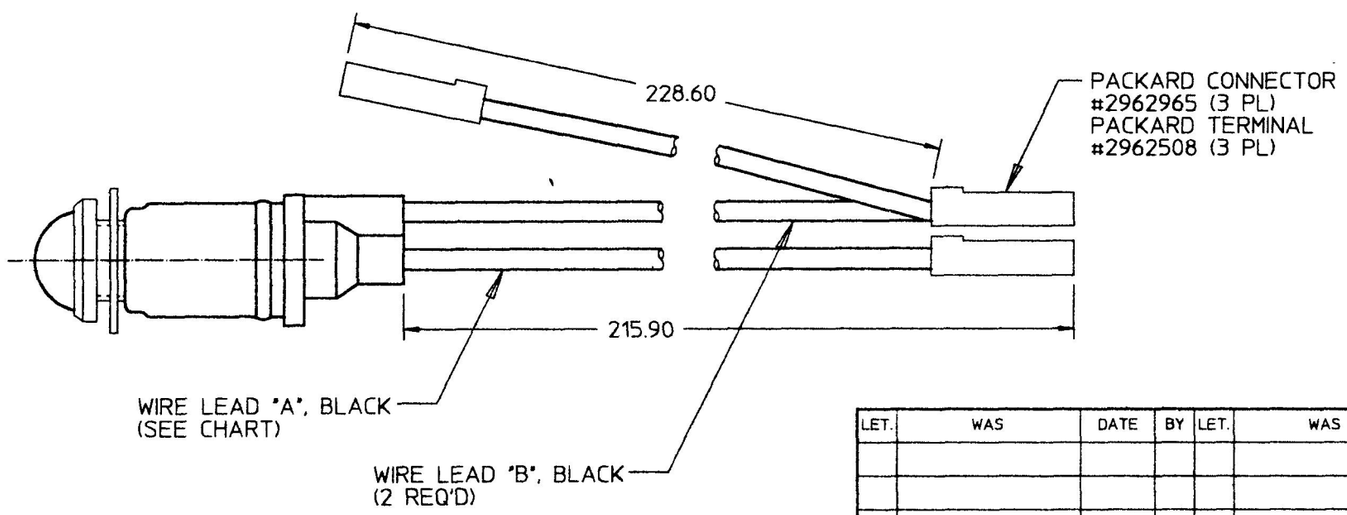

NOTES:
1. PART NO. SUFFIX LETTER DENOTES COLOR OF LENS & VOLTAGE
2. ALL STEEL PARTS PLATED
3. ALL DIMENSIONS REF. ONLY

DO NOT SCALE

LET.	WAS	DATE	BY	LET.	WAS	DATE	BY
				P	ECN # 26459 REVISED -RA004	2/19/97	DPS
				N	ECN # 25935 REVISED DRAWING	5/30/95	MB

MATERIAL	DRAWN	CHK	APVD	SCALE		DATE DRAWN
	RD	JMP		1:1		12/21/53
FINISH	Cole Hersee Co. 20 OLD COLONY AVENUE, BOSTON, MA., U.S.A., 02127					DATE BLUEPRINTED
TOLERANCES DECIMAL ± ANGLE ±	PILOT LIGHT					PL-36

Confidential Property of Cole Hersee