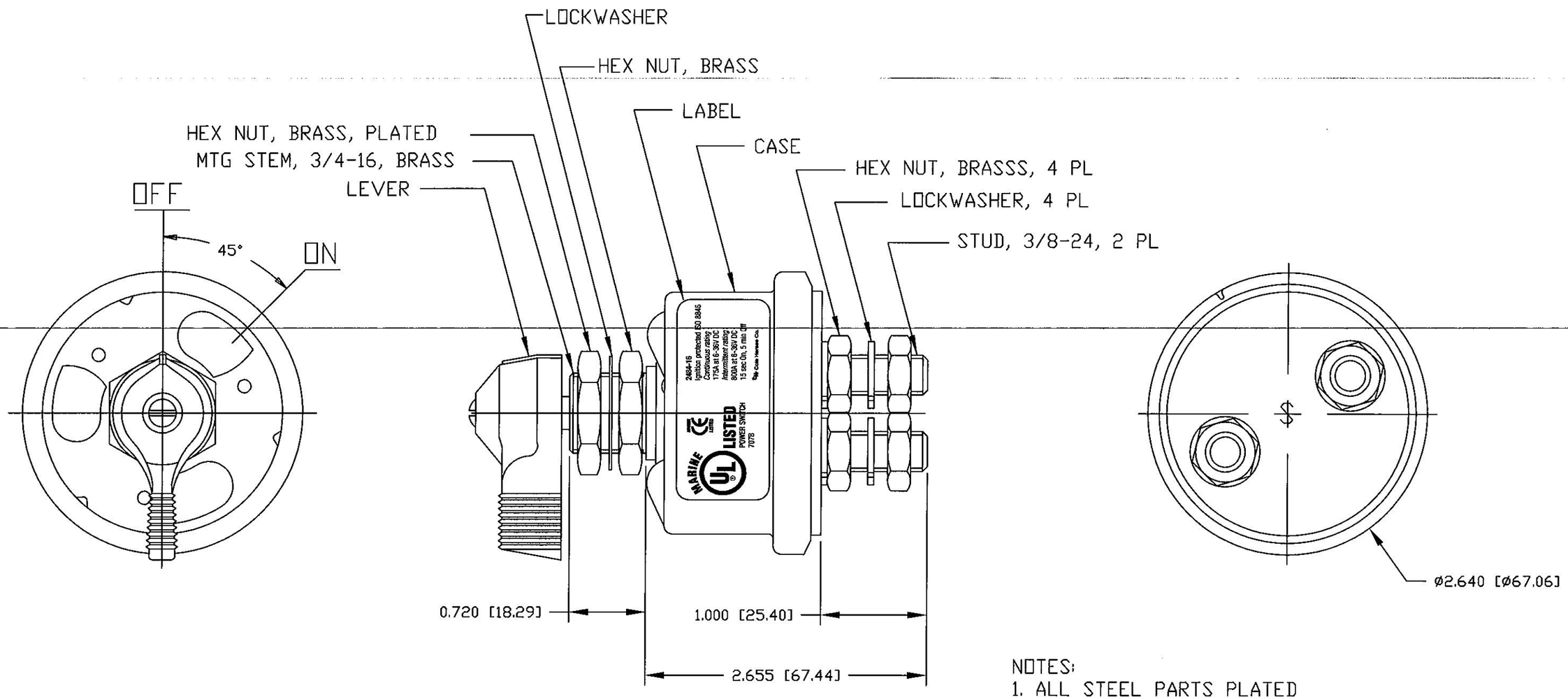

NOTES:
1. ALL STEEL PARTS PLATED
2. ALL DIMENSIONS REFERENCE ONLY
3. SILVER CONTACT SURFACES
4. RATING:
   CONTINUOUS-175 AMPS, 6-12-24-36 VDC
   INTERMITTENT-800 AMPS, 6-12-24-36 VDC
   15 SECONDS ON, 5 MINUTES OFF, IGNITION PROTECTED

METRIC

Revision Control Record

Rev.	Description of Change	ECN No.	Date
H	UPDATED DRAWING FORMAT UPDATED LABEL	10016	01/13/10

Rev.	Description of Change	ECN No.	Date

Tolerances Unless otherwise specifically noted, the following are default tolerances;

2-places	3-places	Angular
+/- 0.02"	+/- 0.005"	+/- 1°

Metric: Shown in [ ] refers to equivalent English Dim Tol

"REF." or an Asterisk (*) = Non-Toleranced Reference Dimension, shown for clarification purposes only.

NOTE: *All tolerances are Non-Cumulative.*

PROPRIETARY INFORMATION
This Engineering Drawing, and the information contained herein, is proprietary to Cole Hersee Company and may not be disclosed, re-produced, or in any other way transferred or communicated to any other party without the express written consent of an authorized representative of Cole Hersee Company.

Special Characteristics:
- (CC) Critical Characteristic, relating to Safety and/or Regulatory Compliance
- [X] Significant Characteristic relating to Process Control
- (KC) Control Dimension relating to Form - Fit - Function as defined by Cole Hersee Company and/or the Customer

Cole Hersee Co.
20 Old Colony Ave., South Boston, MA, 02127
Phn: 617-268-2100 Web: www.colehersee.com

Description: SWITCH, MASTER DISCONNECT

Drawing / Part No.: 2484-16

Current Rev. H

FORM CHT-6 (2/07) | Used On or Ref.: 2484-A WITH UL LABEL | Scale: 1:1 | Drawn BY: JAV | Date Drawn: 02/08/79 | Pg. 1 of 1