## Revision Control Record

| Rev. | Description of Change | ECN No. | Date |
|---|---|---|---|
| A | NEW PART RELEASE | 03443 | 10/09/03 |
| B | ALL HARDWARE ASSBLD; PN'S DROPPED FROM CHART | 13188 | 08/18/13 |
| | | | |
| | | | |

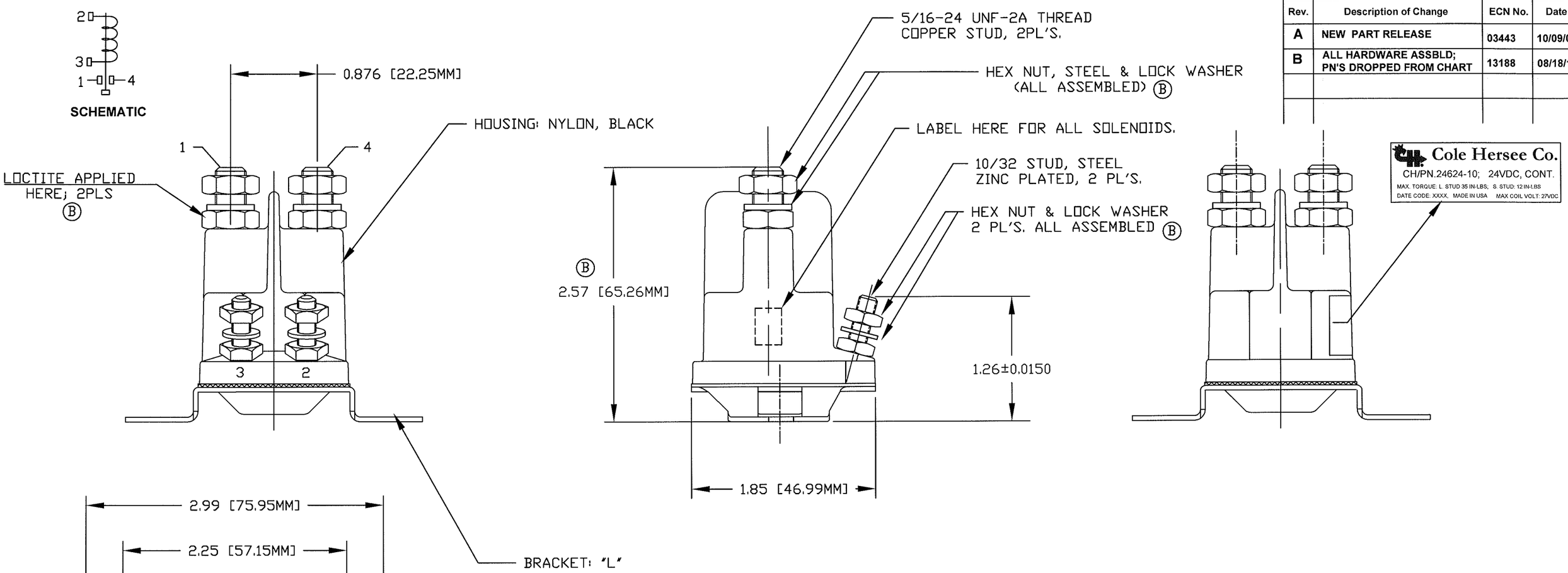


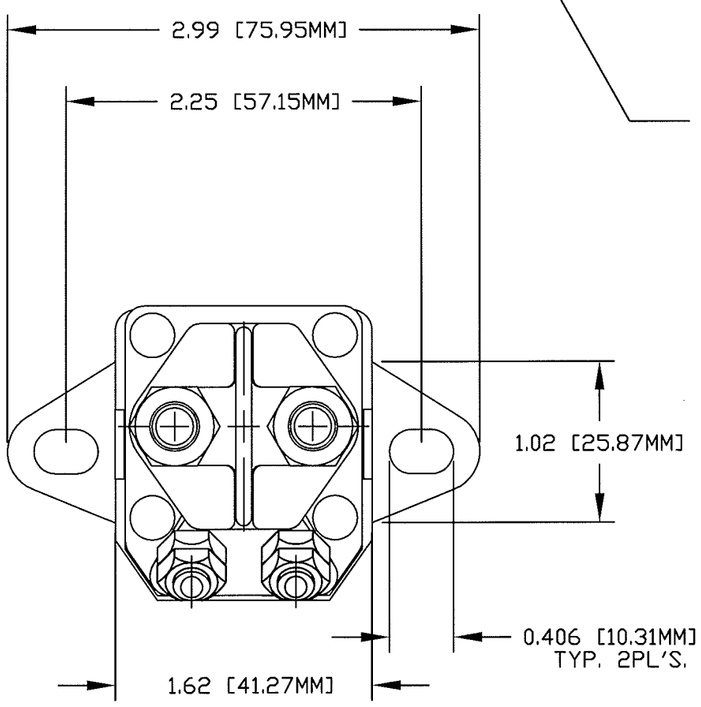


NOTES:
1. ALL DIMENSIONS ARE REFERENCE.
2. ALL STEEL PARTS ARE ZINC PLATED. HOUSING MATERIAL: NYLON, GLASS REINFORCED.
3. CONT. DUTY COIL RESISTANCE @ 25°C: : 76 OHMS
4. SILVER CONTACT CONTINUOUS CURRENT CARRYING CAPACITY: 100 AMPS. INRUSH: 400 AMPS,
5. LIFE CYCLE: 50K CYCLES
6. HARDWARE: ALL HARDWARE IS SHIPPED ASSEMBLED.
(B)7. OPERATING TEMPERATURE: -40°C TO 59°C. (-40 TO 140°F)
8. ENVIRONMENTAL RATING: IP6X
9: HARDWARE TORQUE FOR CABLE ASSEMBLY: 35 IN-LBS MAX 5/16 NUTS; 12 IN-LBS MAX FOR 10/32 NUTS.

**Tolerances** Unless otherwise specifically noted, the following are default tolerances;
* 2-place Decimal Dimensions +/- .02"
* 3-place Decimal Dimensions +/- .005"
* Angular Dimensions +/- 1.0 Deg.
* Metric: Refer to equivalent English Dimension Tolerance

>>> NOTE: *All tolerances are Non-Cumulative.* <<<

**Dimensional Units** All dimensions are expressed in inches except those shown in brackets (xxx) are expressed in millimeters

"REF." or an Asterisk (*) = Non-Toleranced Reference Dimension, shown for clarification purposes only.


**PROPRIETARY INFORMATION** This Engineering Drawing, and the information contained herein, is proprietary to Cole Hersee Company and may not be disclosed, re-produced, or in any other way transferred or communicated to any other party without the express written consent of an authorized representative of Cole Hersee Company.


**DESIGN CONTROL** It is the responsibility of the individual using / referencing this drawing to assure that the noted design revision level agrees with the revision level of the Controlled Document (Master Drawing). This is a NON-CONTROLLED DOCUMENT unless otherwise specifically noted.

*DO NOT SCALE* - Dimensional variation may occur during printing / reproduction.

**Special Characteristics:**

- (CC) Critical Characteristic, relating to Safety and/or Regulatory Compliance
- (X) Significant Characteristic relating to Process Control (SPC)
- (KC) Key Characteristic relating to Form - Fit - Function as defined by Cole Hersee Company and/or the Customer

(Note that the identification of any Characteristics as being "Special" does not alter the requirement that ALL specificed dimensions & tolerances must be met.)


**Cole Hersee Co.**
20 Old Colony Ave., South Boston, MA, 02127
Phn: 617-268-2100 Web: www.colehersee.com


| | | | | | |
|---|---|---|---|---|---|
| Used On or Ref.: EX27922-B12 | Scale: 1:1 | Drawn By: G. AUGUSTE | Date Drawn: 05/02/03 | Responsible Engineer: G. AUGUSTE | Pg. 1 OF 1 |

Description: **SOLENOID, 24V, SPST,N.O**

Drawing / Part No.: **24624-10** Current Rev. **B**