MM	IN
6.85	270
13 30	524
13 46	530
19 05	750
33 52	1 320
39 14	1 541

59024-14

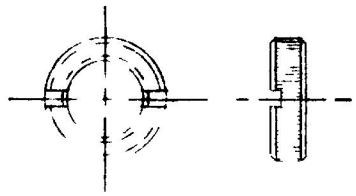

FACE NUT

TOGGLE

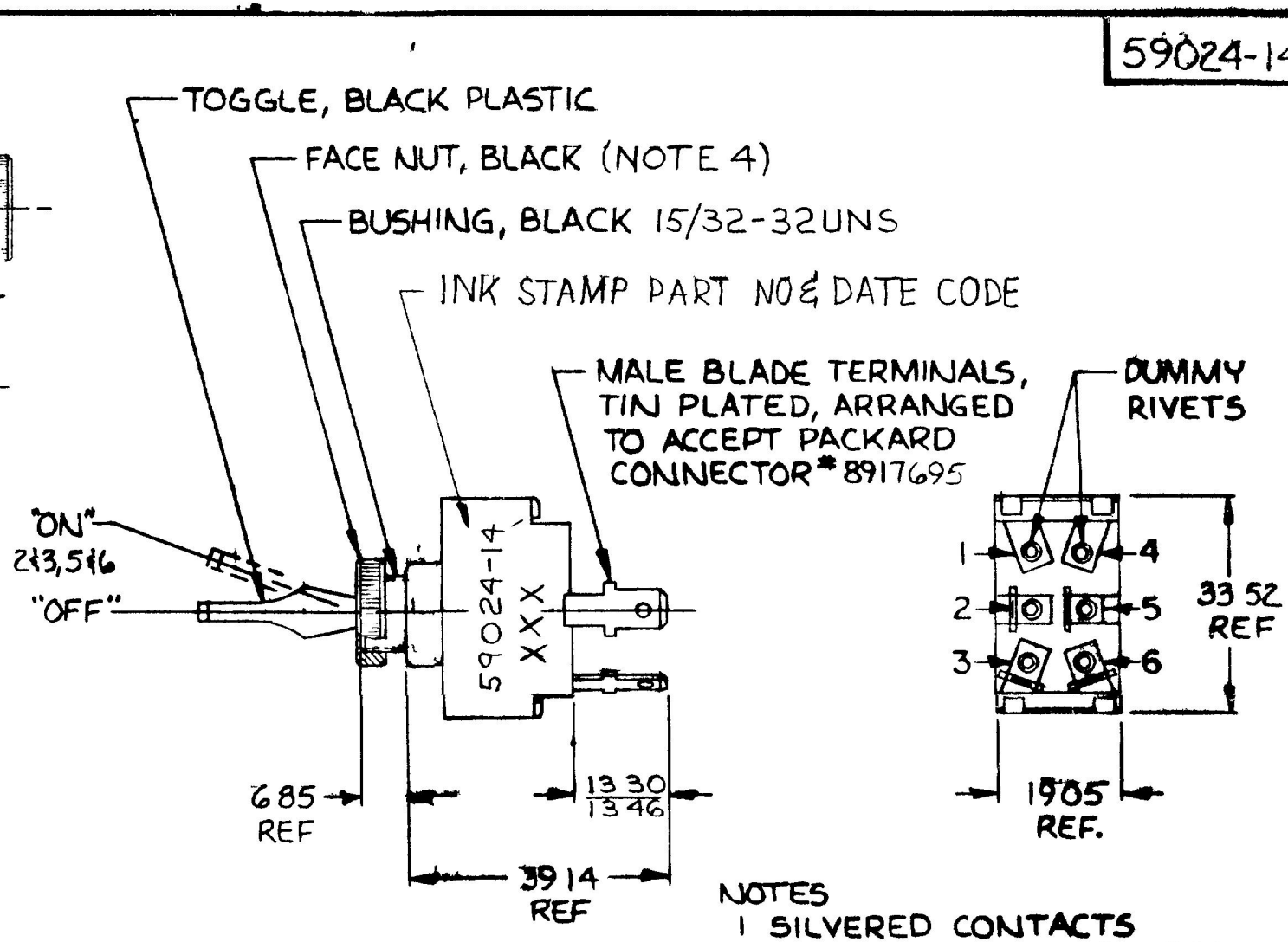

NOTES
1 SILVERED CONTACTS
2 ALL STEEL PARTS PLATED.
3 25 AMPS @ 12 V D C
4 FACE NUT ASSEMBLED

METRIC

DO NOT SCALE

LET	WAS	DATE	BY	LET	WAS	DATE	BY
					ISSUED	9286	A

MATERIAL	DRAWN	CHECKED	APPRV'D	SCALE	DATE DRAWN
—	VAK			1·1	3/25/86
FINISH	Cole Hersee Co.				DATE BLUEPRINT
TOLERANCES DECIMAL ± METRIC ±	SW. TOGGLE DP ST.				59024-14

BRUNING 40-21 63765

CH 188(4 78)

EX21032C

Confidential Property of Cole Hersee