91Bal
91051

EX 165596

COLE-HERSEE CO. N.P.M. 2-13-73

91050

LOCK WASHER - STEEL

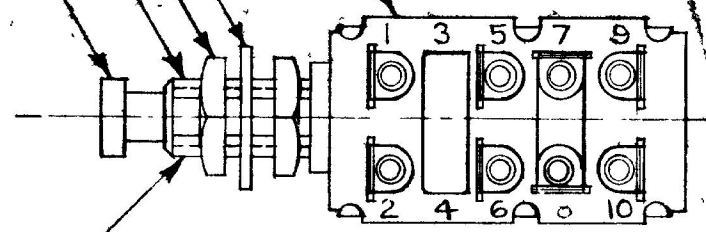
(H) HEX NUT, ZINC PLT. (2 REQ'D)

BUSHING - BRASS

PLUNGER BUTTON - STEEL

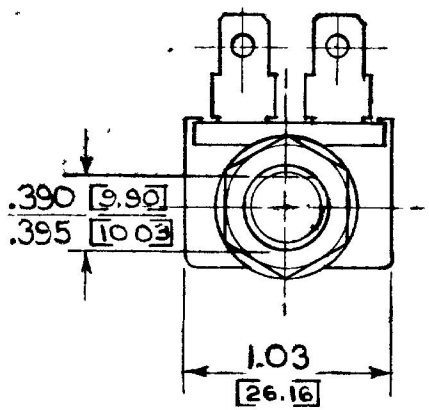
CASE - STEEL

This document contains Proprietary Information of Cole-Hersee Company and is loaned subject to return upon demand and upon the expressed condition that it shall not be used in any way detrimental to the interests of the Cole-Hersee Company. This legend shall appear on any reproduction hereof in whole or in part.

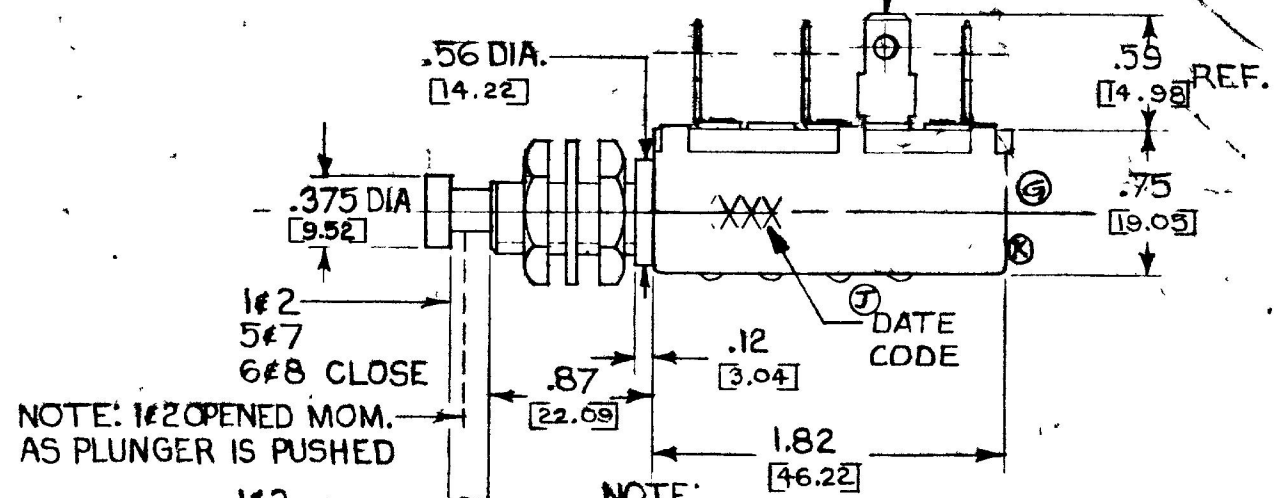


7/16 - 28 UNEF - 2A THD.

MALE BLADE TERM. BRASS - SAEJ858



NOTE:
SWITCH SHOWN IN NORMAL POSITION



NOTE:
1. SILVER LAMINATED CONTACT SURFACES
2. ALL STEEL PARTS EITHER ZINC PLT. WITH DICH. DIP OR CAD. PLT.

DO NOT SCALE

LET	WAS	DATE	BY
K	REVISED PER ECO 39653II / 25989	12/11/93	SH
J	ADDED DATE CODE / 21317	4-16-81	KG
H	REV / 20975	12 16 80	KG
G	PER ECO 17515	7-30-74	KG
I	MADE NO CHANGES	3-3-71	KG

MATERIAL

FINISH

TOLERANCES
FRACTIONAL ±
DECIMAL ±.01

DRAWN	CHECKED	APPRV D	SCALE
E.A.	REC. 1-9-73		FULL

DATE DRAWN 12-22-72

DATE BLUEPRINT

COLE-HERSEE COMPANY
BOSTON, MASS 02127, U.S.A.

CONTROL SWITCH

91050

SPAULDING CO, INC 21 54771

Confidential Property of Cole Hersee