M712-09

APPLICABLE SAE STANDARD OR RECOMMENDED PRACTICE SAE J259

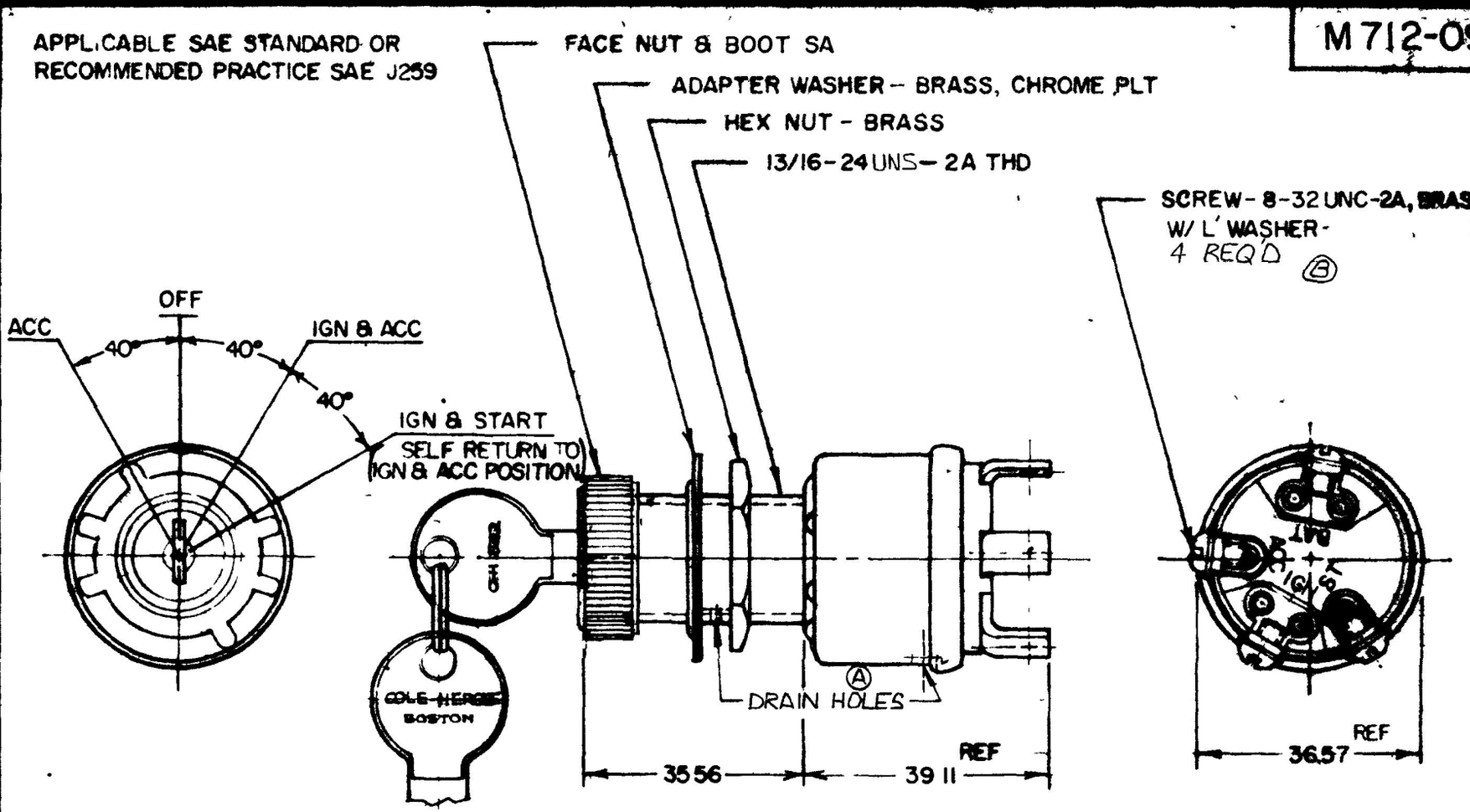

NOTE
1. ALL EXTERIOR METAL PARTS PLAIN BRASS UNLESS NOTED
2. TUMBLER & KEYS - BRASS, NICKEL PLT (RINGED) SUPPLIED IN 10 SETS

METRIC

DO NOT SCALE

LET	WAS	DATE	BY	LET	WAS	DATE	BY
				B	ECN 23741	5-19-88	K
				A	REV DRAIN HOLE #21632	2-22-82	B
					ISSUED	6-12-79	

MATERIAL — # —	DRAWN RMT	CHECKED 6-12-79	APPRV'D	SCALE 1:1	BASIC EXCEPT W/ 83288 KEY BOOT & NUT SA
FINISH — # —	Cole Hersee Co.				
TOLERANCES FRACTIONAL ± DECIMAL ±.25	IGN & START SWITCH (4 POSITION)				

DATE DRAWN 5-31-79

DATE BLUEPRINT

M712-09

NPM 6-6-78
EX-1855

UNIFORCE ELECTRONICS

Confidential Property of Cole Hersee