MM	IN
.38	.015
2.28	.09
12.70	.50
13.71	.54
17.01	.67
17.27	.68
21.08	.83
22.86	.90
27.94	1.10
30.22	1.19
31.49	1.24
36.83	1.45
39.87	1.57

57006-01

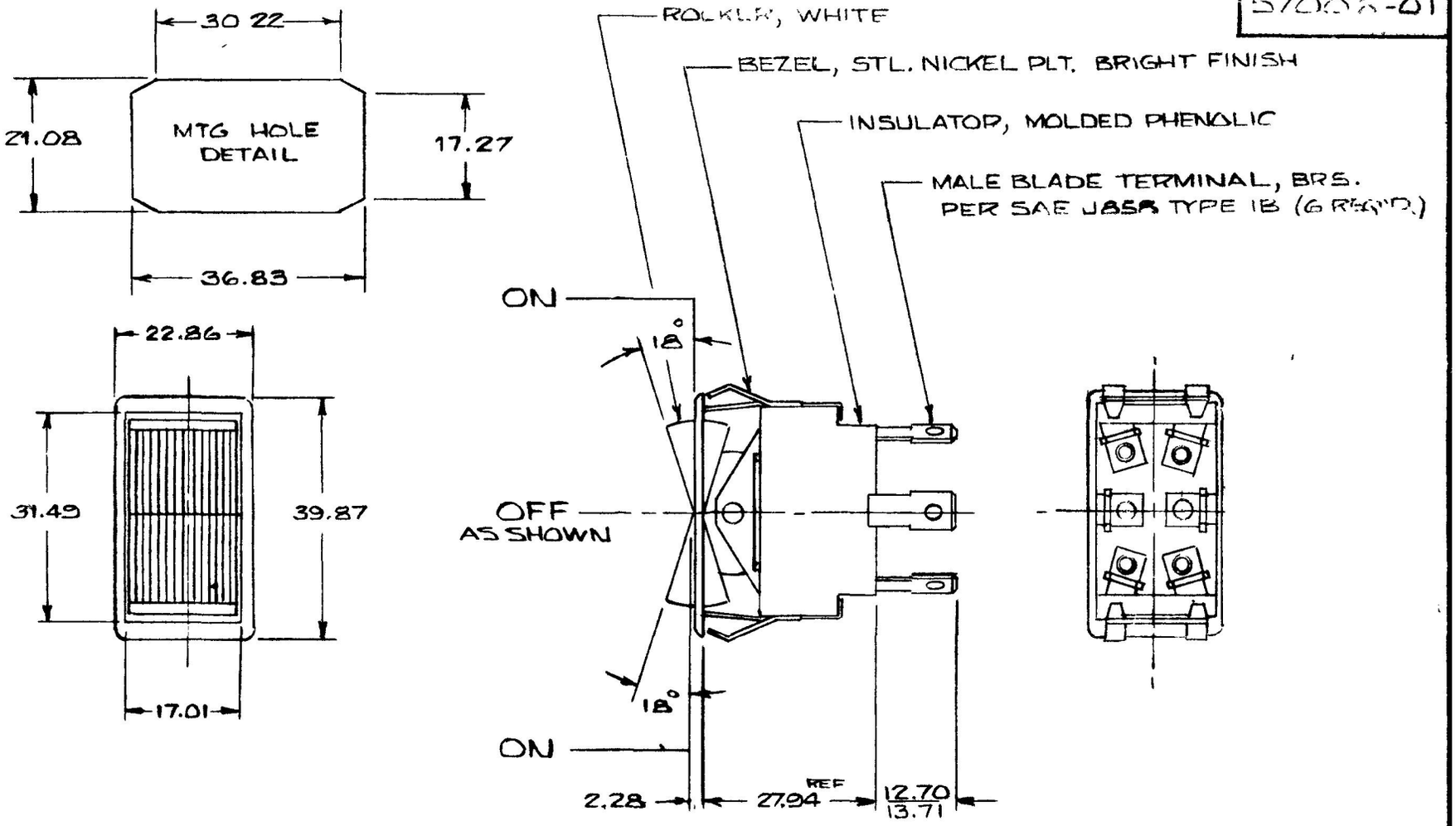

NOTE: 1. 25 AMPS @ 12 VDC LAMP LOAD
2. SILVER CONTACT RIVETS AND SILVER CONTACT PAD

METRIC

HEAVY DUTY

DO NOT SCALE

LET	WAS	DATE	BY	LET	WAS	DATE	BY
				E	REDRAWN	12 6 7-	EA

MATERIAL	DRAWN	CHECKED	APPRV'D	SCALE		DATE DRAWN
—	CT			FULL		12-11-72
FINISH —	Cole Hersee Co. 30 OLD COLONY AVENUE SOUTH BOSTON MA U.S.A. 02127					DATE BLUEPRINT
TOLERANCES FRACTIONAL ± DECIMAL ±.38	DP-DT. ROCKER SW.					57006-01

CH-188 (4-78)

Confidential Property of Cole Hersee