THIS DRAWING AND THE INFORMATION CONTAINED WITHIN IT ARE CONFIDENTIAL AND MAY NOT BE COPIED OR DISCLOSED WITHOUT THE WRITTEN PERMISSION OF LITTELFUSE.

REVISIONS				
ZONE	REV.	DESCRIPTION	DATE	APPROVED
	A	522970GCC NEW RELEASE DRAWING	04/MAR/2021	EDWARD.J
	B	523692 ECC ADD LASER MARKING	11/MAY/2021	EDWARD.J

Voltage (Max.)	32VDC	Mounting Screw	Blade Fuse Isometric View
Input Terminal Rating	M5 Threaded Studs(100A Max)	4x M4xP0.7xL16	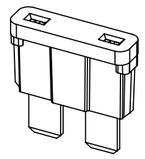
Output Terminal Rating	30A Max. Per Circuit		
Connection Pad Option Avaliable	Input Wire Size:#4-6 AWG		
	Output Wire Size:#12-16AWG		Blade Fuse Dim
Fuse Specifications	For ATO Blade Fuses Only	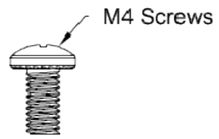	ATO SERIELS
Torqure Rating for M5 Studs	2.25+0/-0.2Nm(20 in-lb)		
Torqure Rating for M4 Screws			
Mounting Torque Rating	0.9+0/-0.1Nm(8 in-lb)		
Temperature Rating	-25°C to +85°C		

Circuit Diagram

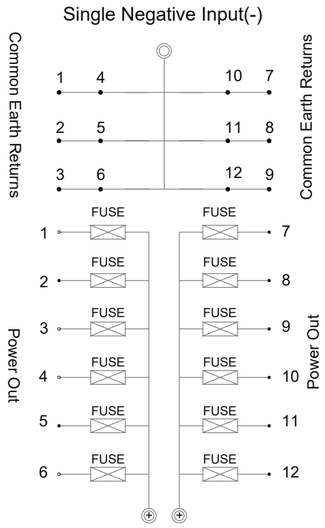

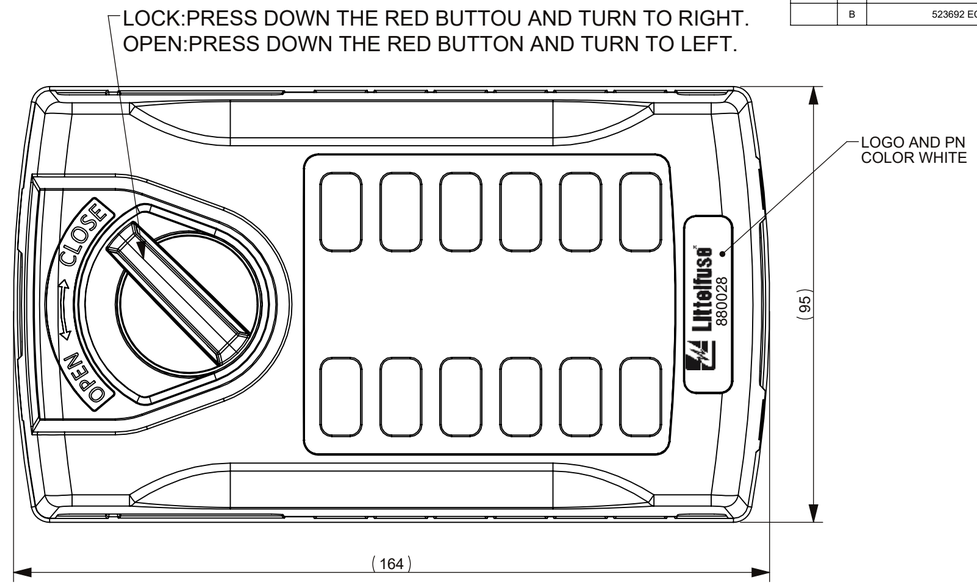

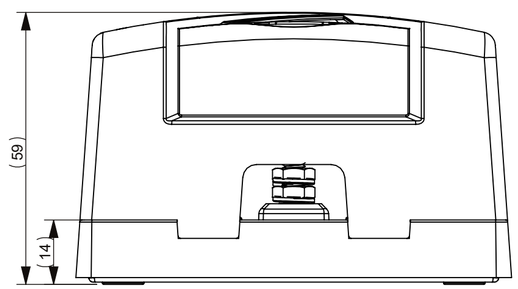

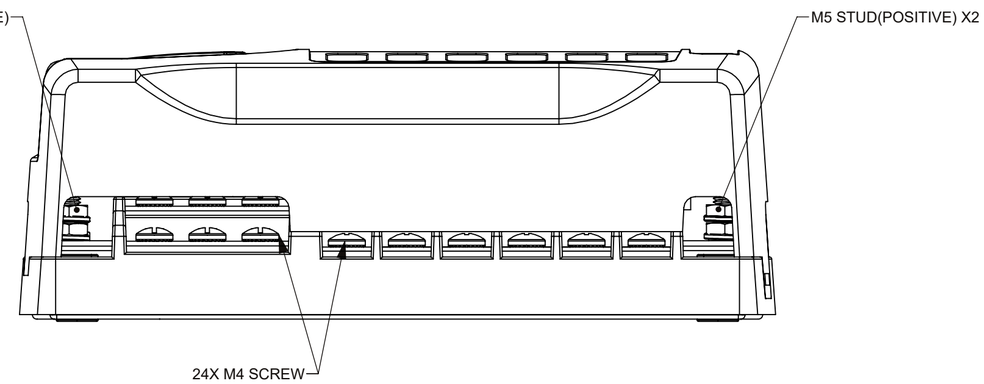

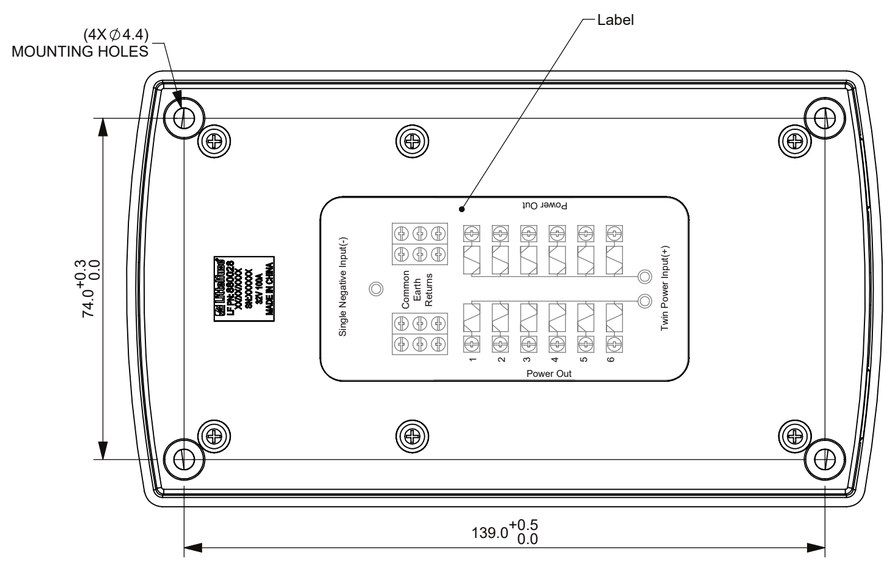

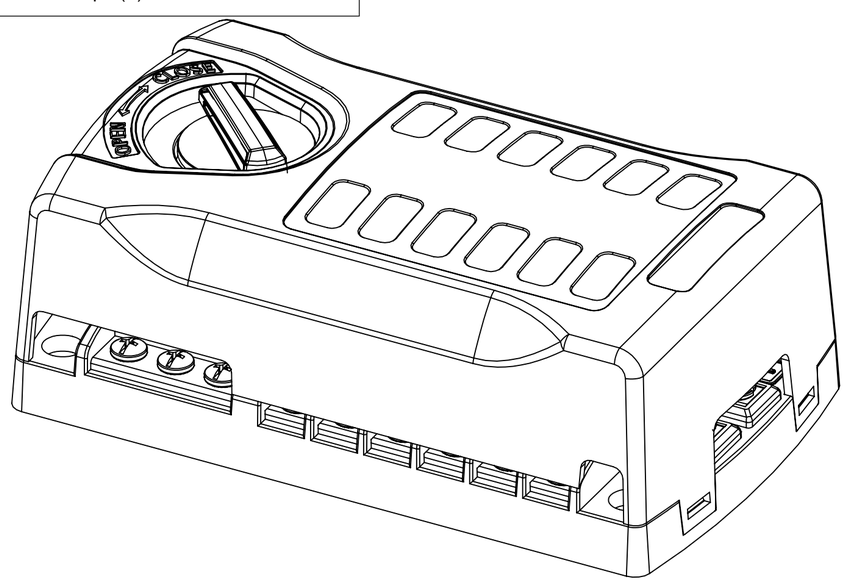

NOTES:
1. MATERIALS:
   BASE/HOUSING: BLACK PBT
   COVER: TRANSPEARANCE PC
   TERMINAL:TINNED COPPER
2. FUSES ASSEMBLY BY HANDS.
3. ALL FUSES MUST NOT EXCEED 70% OF RATED CURRENT

DIMENSIONS ARE SHOWN IN MILLIMETERS. DIMENSIONS AND TOLERANCES ARE DEFINED ACCORDING TO ANSI/ASME Y14.5-1994.

●	FIT FUNCTION CRITICAL CHARACTERISTICS SYMBOL
<S>	SAFETY/ COMPLIANCE CRITICAL CHARACTERISTICS SYMBOL
CPK	DENOTES CPK DIMENSIONS MINIMUM CPK VALUE
⟨ST⟩	DENOTES A CHARACTERISTIC THAT PROVIDES AN INDICATION OF PROCESS PERFORMANCE.PROCEDURE FOR MEASUREMENTAND TRACKINGTO BE DEFINED IN LITTELFUSE INSPECTION INSTRUCTIONS
CP	DENOTES CP DIMENSIONS, -MINIMUM CP VALUE MUST BE WITHIN THE DIMENSIONAL LIMITATIONS SHOWN ON DRAWING AND INITIALLY LOCATED TO ALLOW FOR MAXIMUM TOOL LIFE

DIMENSION; MM TOLERANCES UNLESS OTHERWISE SPECIFIED
ONE PLACE DECIMAL ± 0.5 THREE PLACES DECIMAL ± 0.100
TWO PLACES DECIMAL ± 0.20 ANGULAR ± 2°

	NAME	DATE
DRAWN	Sunny Pan	22/OCT/2020
CHECKED	Jason Li	22/OCT/2020
	-	-
	-	-

FORM NO: CVP-PE40-0006 REV A

THIRD ANGLE PROJECTION

DO NOT SCALE DRAWING

Littelfuse®
Expertise Applied | Answers Delivered

TITLE
880028 PDM 12 POS

SIZE	DWG. NO.	REV.
C	OL-880028	B

SCALE 1:1 SHEET 1 OF 1