THIS DRAWING AND THE INFORMATION CONTAINED WITHIN IT ARE CONFIDENTIAL AND MAY NOT BE COPIED OR DISCLOSED WITHOUT THE WRITTEN PERMISSION OF LITTELFUSE.

REVISIONS				
ZONE	REV.	DESCRIPTION	DATE	APPROVED
	A	GCF#524714 INITIAL RELEASE	NOV./25/2021	D. ZHANG

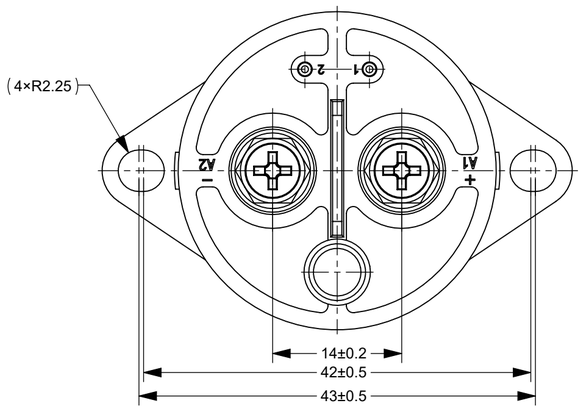

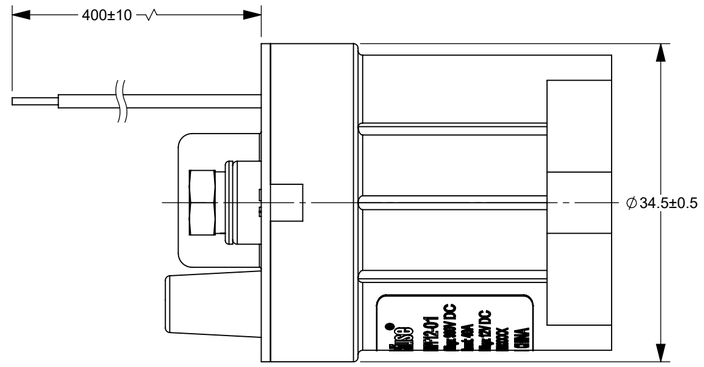

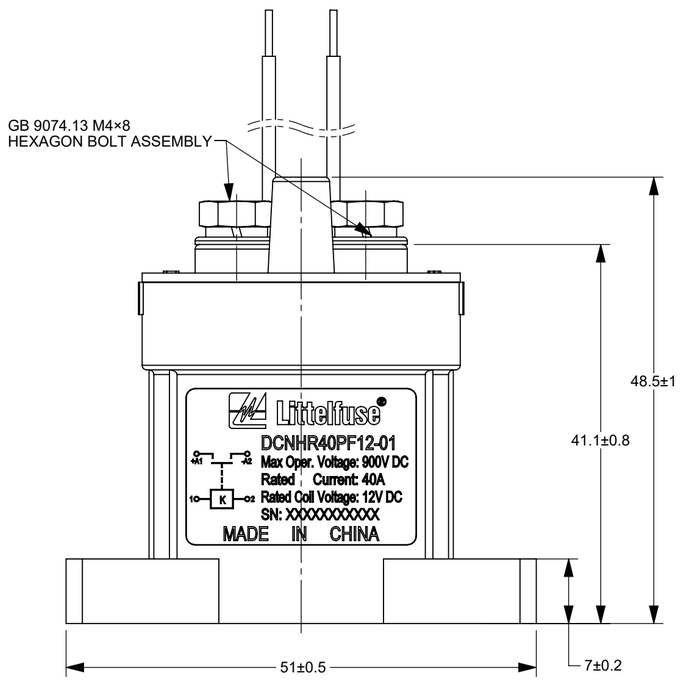

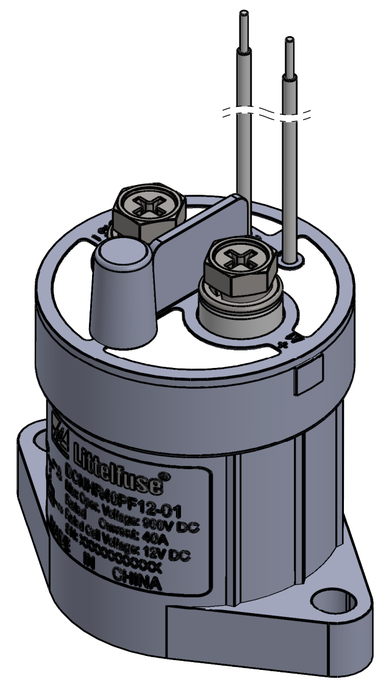

CIRCUIT SCHEMATIC DIAGRAM

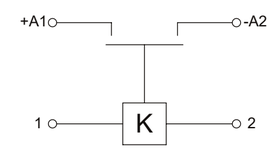

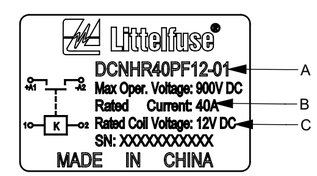

NAME PLATE

TABLE 1				
PN		DCNHR40PF12-01 DCNHR30PF12-01 DCNHR20PF12-01	DCNHR40PF24-01 DCNHR30PF24-01 DCNHR20PF24-01	DCNHR40PF48-01 DCNHR30PF48-01 DCNHR20PF48-01
MAX OPER. VOLTAGE		900V DC		
RATED CONTACT CURRENT		DCNHR40PF SERIES: 40A DCNHR30PF SERIES: 30A DCNHR20PF SERIES: 20A		
COIL RATED VOLTAGE		12V DC	24V DC	48V DC
OPERATING VOLTAGE IN COLD STATE @ (23±5)°C	OPERATE	9V DC MAX	18V DC MAX	36V DC MAX
	RELEASE	1V DC MIN	2V DC MIN	4V DC MIN
OPERATE TIME		25ms MAX		
CONTACT BOUNCE TIME		7ms MAX		
RELEASE TIME		12ms MAX		
MAIN CONTACT RESISTANCE(@ 20A)		≤2mΩ		
INSULATION RESISTANCE @ 500 V (INITIAL)		≥100MΩ		
DIELECTRIC STRENGTH (LEAKAGE CURRENT≤1 mA)		2200V AC, 1 MINUTE		
ELECTRIC LIFE	DCNHR40PF SERIES	6000 CYCLES (40A @ 450V DC)		
	DCNHR30PF SERIES	7500 CYCLES (30A @ 450V DC)		
	DCNHR20PF SERIES	10000 CYCLES (20A @ 450V DC)		
MECHANICAL LIFE(NO LOAD, CYCLES)		200, 000		
WORKING DUTY		CONTINUOUS		

● TABLE 2 (CONFIGURATION)					
NO.	PN	"A"	"B"	"C"	REMARK
1	DCNHR40PF12-01	DCNHR40PF12-01	Rated Current: 40A	Coil Voltage: 12V DC	
2	DCNHR40PF24-01	DCNHR40PF24-01		Coil Voltage: 24V DC	
3	DCNHR40PF48-01	DCNHR40PF48-01		Coil Voltage: 48V DC	
4	DCNHR30PF12-01	DCNHR30PF12-01	Rated Current: 30A	Coil Voltage: 12V DC	
5	DCNHR30PF24-01	DCNHR30PF24-01		Coil Voltage: 24V DC	
6	DCNHR30PF48-01	DCNHR30PF48-01		Coil Voltage: 48V DC	
7	DCNHR20PF12-01	DCNHR20PF12-01	Rated Current: 20A	Coil Voltage: 12V DC	
8	DCNHR20PF24-01	DCNHR20PF24-01		Coil Voltage: 24V DC	
9	DCNHR20PF48-01	DCNHR20PF48-01		Coil Voltage: 48V DC	

NOTES:
1. ALL DIMENSIONS ARE REFERENCE ONLY.
2. SEE TABLE 2 FOR NAME PLATE AND PNs
3. PRODUCT TYPE: SPST-NO, POLAR CONTACTOR.
4. MATERIALS AND FINISH:
4.1 HOUSING: THERMOPLASTIC PLASTICS.
4.2 CONTACTS: COPPER ALLOY.
4.3 CONTACT STUDS: STAINLESS STEEL.
4.4 COIL TERMINALS: TEFLON WIRE UL1332 22AWG-WHITE.
5. MAIN CONTACT M5 STUD, TORQUE: 1.7~2N•m.
6. MOUNTING: M4 BOLT, RECOMMENDED TORQUE 1.8 ~ 2.3N•m.
7. CONTACTOR PARAMETERS ARE SHOWN IN TABLE 1.

DIMENSIONS ARE SHOWN IN MILLIMETERS. DIMENSIONS AND TOLERANCES ARE DEFINED ACCORDING TO ANSI/ASME Y14.5-1994.

PER CHI-NPD20-0008 PROCEDURE

●	FIT/ FUNCTION CRITICAL CHARACTERISTICS
<S>	SAFETY/ COMPLIANCE CRITICAL CHARACTERISTICS SYMBOL
CPK	DENOTES CPK DIMENSIONS MINIMUM CPK VALUE
⟨ST⟩	DENOTES A CHARACTERISTIC THAT PROVIDES AN INDICATION OF PROCESS PERFORMANCE PROCEDURE FOR MEASUREMENTAND TRACKINGTO BE DEFINED IN LITTELFUSE INSPECTION INSTRUCTIONS
CP	DENOTES CP DIMENSIONS, -MINIMUM CP VALUE MUST BE WITHIN THE DIMENSIONAL LIMITATIONS SHOWN ON DRAWING AND INITIALLY LOCATED TO ALLOW FOR MAXIMUM TOOL LIFE

	NAME	DATE
DRAWN	JY. SHI	NOV./5/2021
CHECKED	J. LI	NOV./15/2021
	-	-
	-	-

FORM NO: CVP-PE40-0005 REV B

THIRD ANGLE PROJECTION

DO NOT SCALE DRAWING

Littelfuse
Expertise Applied | Answers Delivered

TITLE: DCNHR 40A POLAR CONTACTOR

SIZE: C | DWG. NO. OUTLINE OL-DCNHR40PF, CHART 2 | REV. A

SCALE 2:1 | SHEET 1 OF 1