Revision Control Record

Rev.	Description of Change	ECN No.	Date
A	RELEASED DRAWING	11392	10/28/11
B	ADDED LABEL	12062	2/15/12

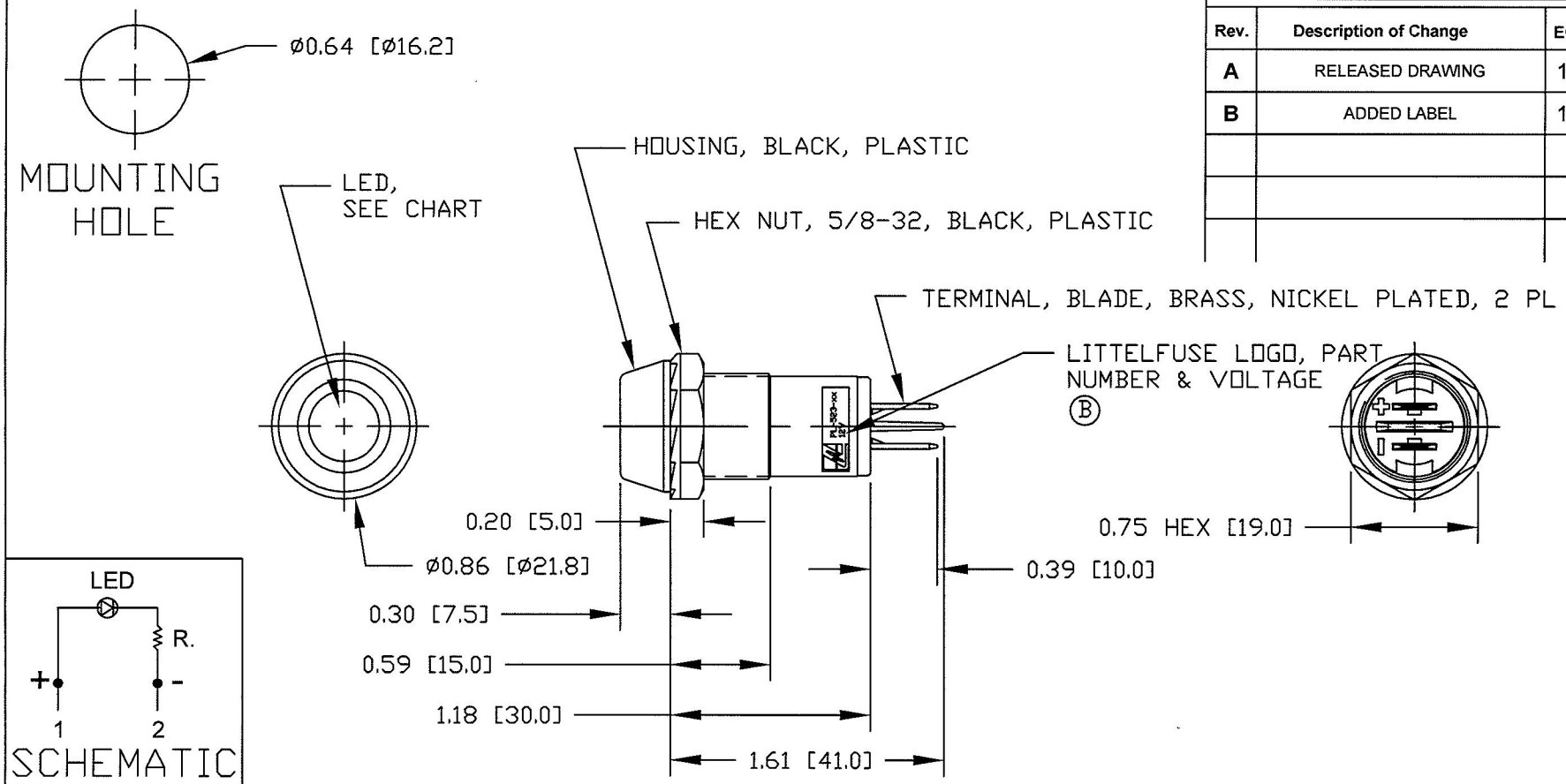

PT NO	LENS & LED COLOR
PL-523-RC	RED
PL-523-GC	GREEN
PL-523-CC	CLEAR/WHITE
PL-523-BC	BLUE
PL-523-AC	AMBER

NOTES:
1. POLARITY SENSITIVE
2. RATING: 12Vdc
3. ILLUMINATION: 500 LUX

Tolerances Unless otherwise specifically noted, the following are default tolerances;

2-places	3-places	Angular
+/- 0.02"	+/- 0.005"	+/- 1°

Metric: Shown in [ ] refers to equivalent English Dim Tol

"REF." or an Asterisk (*) = Non-Toleranced Reference Dimension, shown for clarification purposes only.

NOTE: *All tolerances are Non-Cumulative.*

PROPRIETARY INFORMATION
This Engineering Drawing, and the information contained herein, is proprietary to Cole Hersee Company and may not be disclosed, re-produced, or in any other way transferred or communicated to any other party without the express written consent of an authorized representative of Cole Hersee Company.

Special Characteristics:

- CC — Critical Characteristic, relating to Safety and/or Regulatory Compliance
- X — Significant Characteristic relating to Process Control
- KC — Control Dimension relating to Form - Fit - Function as defined by Cole Hersee Company and/or the Customer

Cole Hersee Co.
20 Old Colony Ave., South Boston, MA, 02127
Phn: 617-268-2100 Web: www.colehersee.com

Description: PILOT LIGHT, LED

Drawing / Part No.: PL-523

Current Rev. B

FORM CHT-6 (2/07)	Used On or Ref.: EX28912	Scale: 1:1	Drawn BY: DPS	Date Drawn: 9/30/11	Pg. 1 of 1