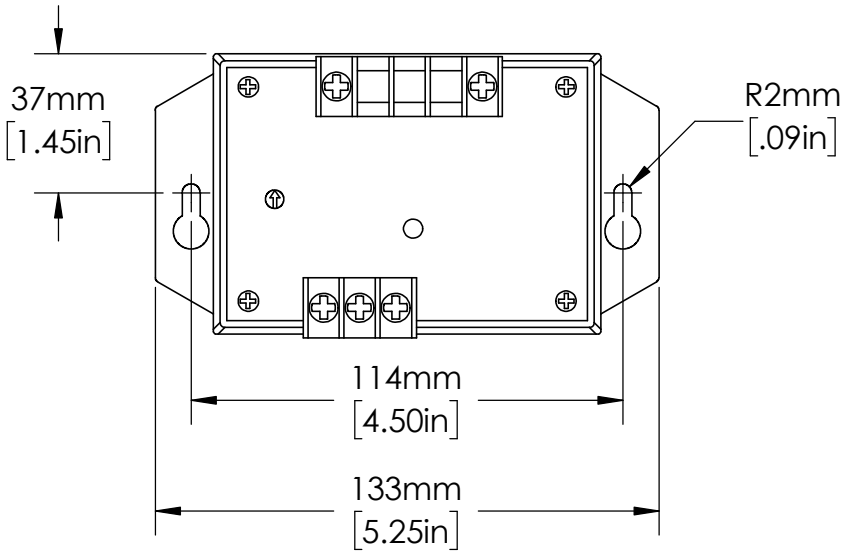

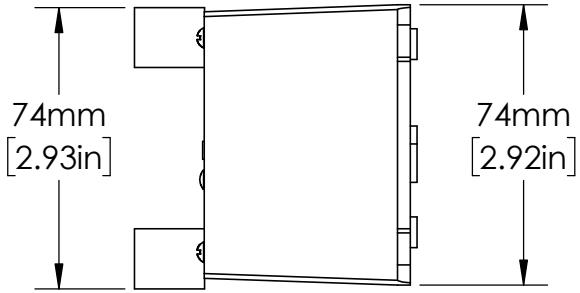

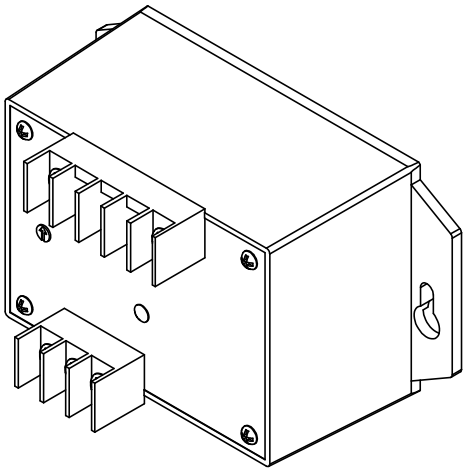

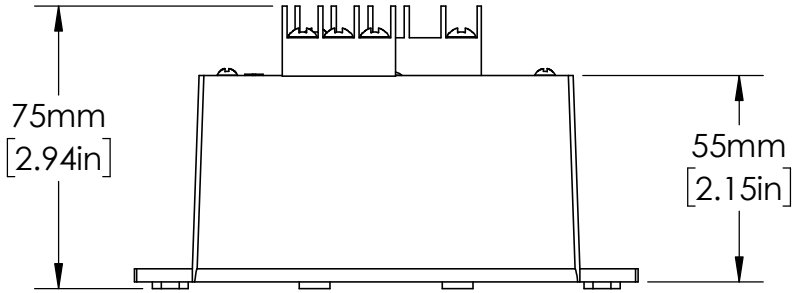

Littelfuse®

UNLESS NOTED OTHERWISE
DIMENSIONS ARE IN INCHES
TOLERANCES:
TWO PLACE DECIMAL ±0.05
NOT DRAWN TO SCALE

DESCRIPTION:
SINGLE-PHASE VOLTAGE MONITORING PROTECTION

PART NUMBER:
50R SERIES

REV
A

WEIGHT:

SHEET 1 OF 1

MATERIAL		
	NAME	DATE
DRAWN BY	J.MOLER	01/18/23