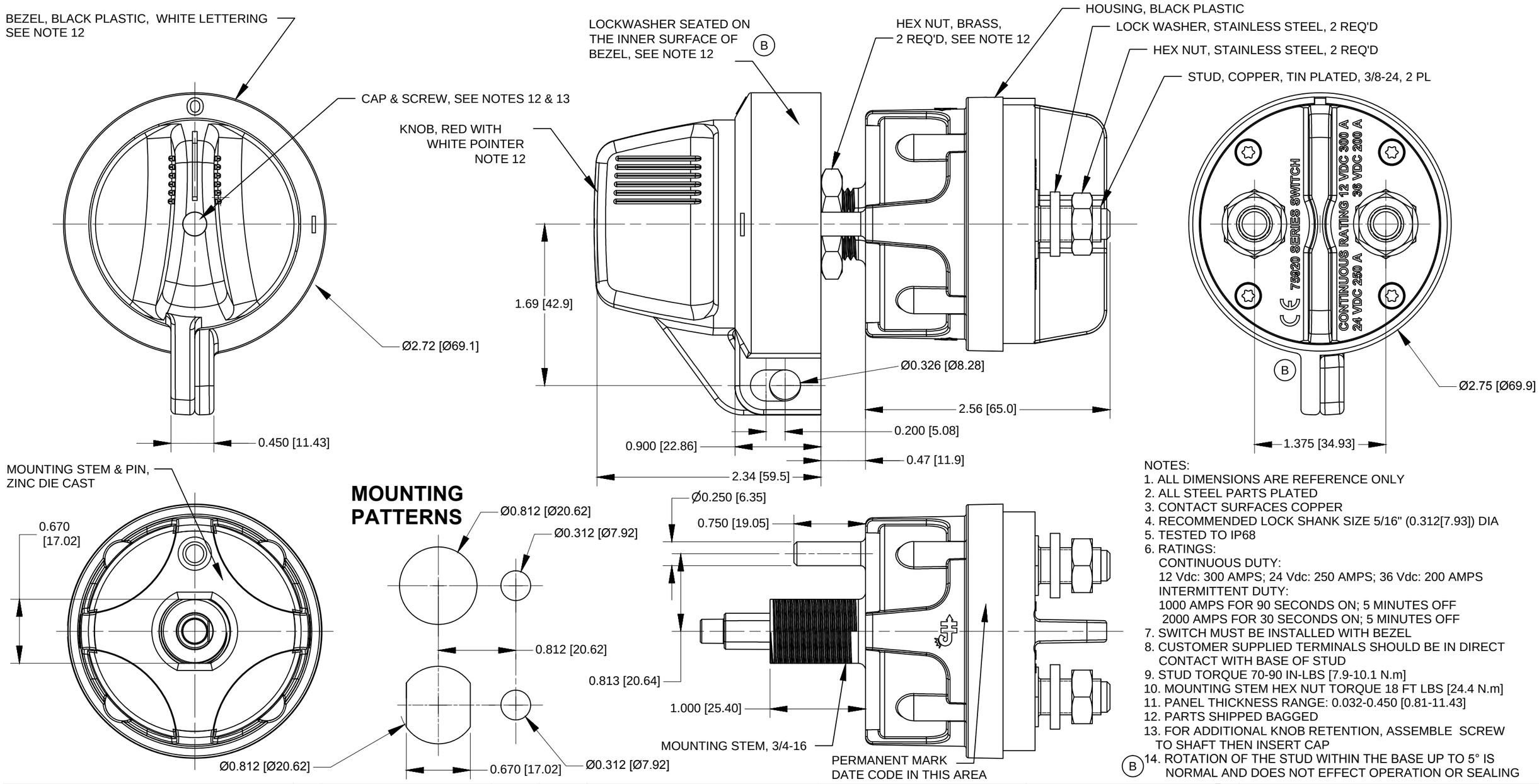

NOTES:
1. ALL DIMENSIONS ARE REFERENCE ONLY
2. ALL STEEL PARTS PLATED
3. CONTACT SURFACES COPPER
4. RECOMMENDED LOCK SHANK SIZE 5/16" (0.312[7.93]) DIA
5. TESTED TO IP68
6. RATINGS:
   CONTINUOUS DUTY:
   12 Vdc: 300 AMPS; 24 Vdc: 250 AMPS; 36 Vdc: 200 AMPS
   INTERMITTENT DUTY:
   1000 AMPS FOR 90 SECONDS ON; 5 MINUTES OFF
   2000 AMPS FOR 30 SECONDS ON; 5 MINUTES OFF
7. SWITCH MUST BE INSTALLED WITH BEZEL
8. CUSTOMER SUPPLIED TERMINALS SHOULD BE IN DIRECT CONTACT WITH BASE OF STUD
9. STUD TORQUE 70-90 IN-LBS [7.9-10.1 N.m]
10. MOUNTING STEM HEX NUT TORQUE 18 FT LBS [24.4 N.m]
11. PANEL THICKNESS RANGE: 0.032-0.450 [0.81-11.43]
12. PARTS SHIPPED BAGGED
13. FOR ADDITIONAL KNOB RETENTION, ASSEMBLE SCREW TO SHAFT THEN INSERT CAP
(B) 14. ROTATION OF THE STUD WITHIN THE BASE UP TO 5° IS NORMAL AND DOES NOT EFFECT OPERATION OR SEALING

Revision Control Record

Rev.	Description of Change	ECN No.	Date
A	ADD STAINLESS STEEL HARDWARE	12328	10/29/12
B	ADD CE MARK & NOTE	09525	09/30/13

Rev.	Description of Change	ECN No.	Date

Tolerances Unless otherwise specifically noted, the following are default tolerances;

2-places	3-places	Angular
+/- 0.02"	+/- 0.005"	+/- 1˚

Metric: Shown in [ ] refers to equivalent English Dim Tol

"REF." or an Asterisk (*) = Non-Toleranced Reference Dimension, shown for clarification purposes only.

NOTE: *All tolerances are Non-Cumulative.*

PROPRIETARY INFORMATION This Engineering Drawing, and the information contained herein, is proprietary to Cole Hersee Company and may not be disclosed, re-produced, or in any other way transferred or communicated to any other party without the express written consent of an authorized representative of Cole Hersee Company.

Special Characteristics:

CC — Critical Characteristic, relating to Safety and/or Regulatory Compliance

X — Significant Characteristic relating to Process Control

KC — Control Dimension relating to Form - Fit - Function as defined by Cole Hersee Company and/or the Customer

Cole Hersee Co.
20 Old Colony Ave., South Boston, MA, 02127
Phn: 617-268-2100 Web: www.colehersee.com

Description: SW,ROT,MAST DISC

Drawing / Part No.: 75920-10

Current Rev.: B

FORM CHT-6 (2/07) | Used On or Ref.: 75920, EX28988 | Scale: 1:1 | Drawn By: DPS | Date Drawn: 9/4/12 | Pg. 1 of 1