PART NUMBER	COVER OPENING	DIMENSION "A"	FUSE	FUSE QTY/1000	SPLIT WASHER	SPLIT WASHER QTY/1000	HEX NUT	HEX NUT QTY/M	RACHET FASTENER	RACHET FASTENER QTY/1000	STYLE
04980900ZXT	A D	10.44 [.411]	NO	N/A	YES	2000	YES	2000	NO	N/A	1
04980902ZXT	A D	10.44 [.411]	NO	N/A	NO	N/A	YES	2000	NO	N/A	1
04980903ZXT	A D	10.44 [.411]	NO	N/A	YES	2000	YES	2000	NO	N/A	2
04980904ZXT	A D	10.44 [.411]	NO	N/A	YES	2000	YES	4090	NO	N/A	1
04980905ZXT	A C E	10.44 [.411]	NO	N/A	YES	2000	YES	2000	NO	N/A	1
04980906ZXT	A E	10.44 [.411]	NO	N/A	YES	2000	YES	2000	NO	N/A	1
04980907ZXT	A C	10.44 [.411]	NO	N/A	YES	2000	YES	2000	NO	N/A	1
04980908ZXT	E F	N/A	NO	N/A	NO	N/A	NO	N/A	NO	N/A	2
04980909ZXT	E F	N/A	100A	1000	YES	2000	YES	2000	YES	2000	2
04980910ZXT	E F	N/A	NO	N/A	YES	2000	YES	2000	NO	NO	1
04980911ZXT	E F	N/A	50A	1000	YES	2000	YES	2000	YES	2000	2
04980912ZXT	A E F	10.44 [.411]	NO	N/A	YES	2000	YES	2000	NO	N/A	1
04980913ZXT	A D	15.47 [.609]	NO	N/A	NO	N/A	NO	N/A	YES	2000	2
04980914ZXT	A D	15.47 [.609]	40A	1000	YES	2000	YES	2000	YES	2000	2
04980915ZXT	E F	N/A	NO	N/A	YES	2000	YES	2000	NO	N/A	2

*FOR ADDITIONAL INFORMATION
SEE INDIVIDUAL DRAWINGS

LTR	DATE	REVISION	CHK	APD
A	05/25/05	61735 - RELEASE GLAB		
B	06/07/07	85460D-REDRAWN IN UG & CONVERT TO METRIC, ADDED TOLERANCE TO DIMENSIONS, 7.24 WAS (8.19) GMB		

NOTE: SHOWN WITH COVER AND HARDWARE REMOVED

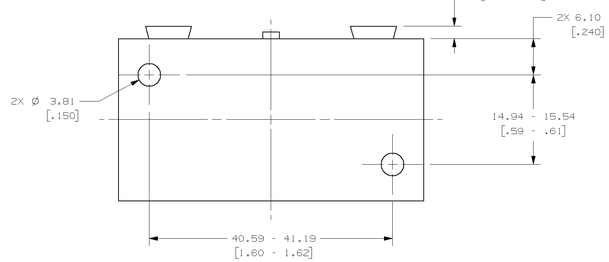

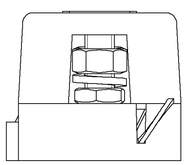

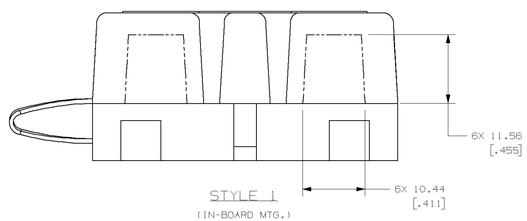

STYLE 1
(IN-BOARD MTG.)

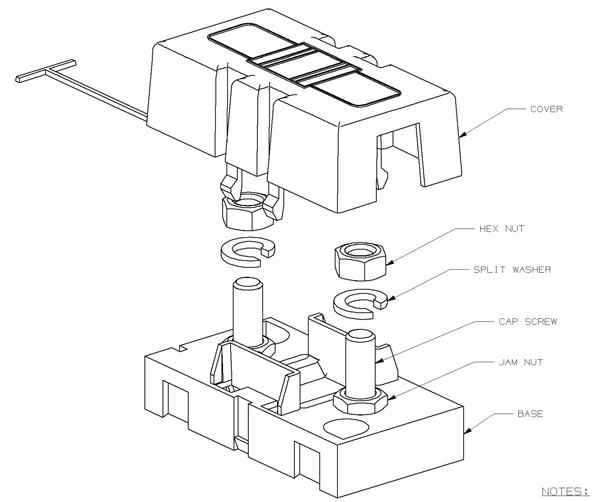

NOTES:

1. MATERIAL:
   * BODY-GLASS FILLED THERMOPLASTIC: COLOR-BLACK
   * COVER-THERMOPLASTIC: COLOR-BLACK
   * HARDWARE-MS THREADED STUDS & NUTS AND STEEL
     LOCKWASHER WITH ZINC AND TRIVALENT CHROMATE, LEACHED AND SEALED,
     INTEGRAL TORQUE CONTROL LUBRICANT FINISH.
     (MEETS ASTM STANDARD B-117, 96 HR. SALT SPRAY REQUIREMENT).
   (04980902ZXT) * HARDWARE-MS THREADED STUDS & NUTS WITH INTEGRAL
     LOCKWASHER WITH ZINC AND TRIVALENT CHROMATE, LEACHED AND SEALED,
     INTEGRAL TORQUE CONTROL LUBRICANT FINISH.
     (MEETS ASTM STANDARD B-117, 96 HR. SALT SPRAY REQUIREMENT).
2. TORQUE REQUIRED FOR MIDI FUSE TERMINAL & CONNECTOR
   LOCKING NUTS TO BE 4.0-5.0 NEWTON METERS [35-44 IN-LBS]
3. HOLDER MEETS L/F VALIDATION TEST SPEC. VS-005004.

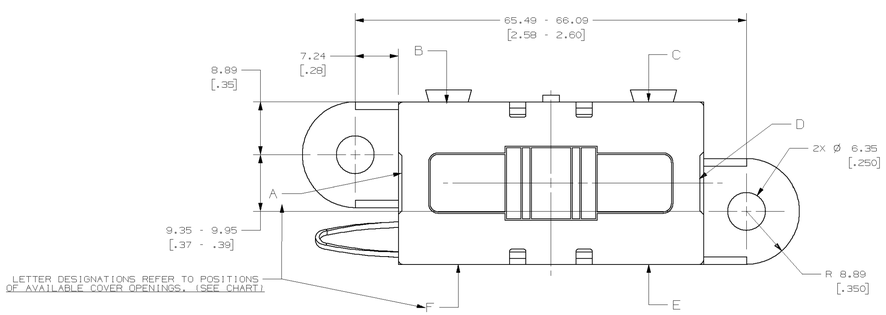

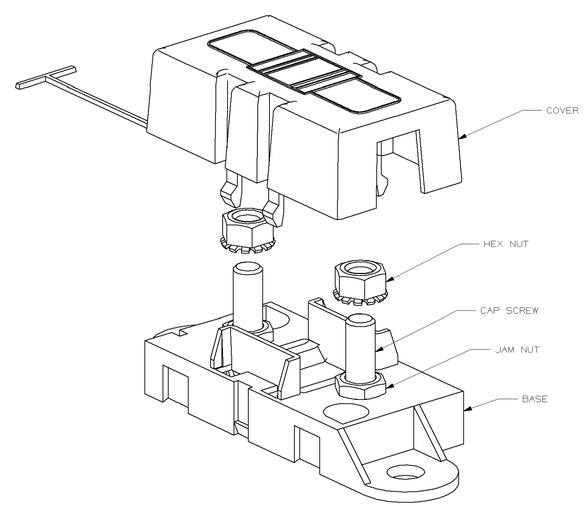

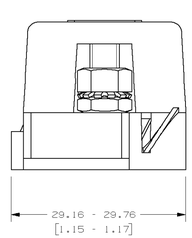

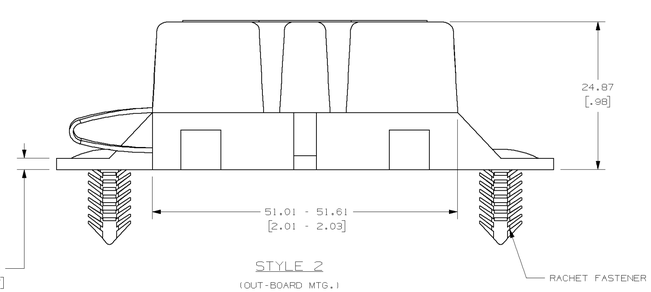

STYLE 2
(OUT-BOARD MTG.)

METRIC

NO	COMPONENT NO	DESCRIPTION	QTY/M	U/M
BILL OF MATERIALS				

UNLESS OTHERWISE SPECIFIED, DIMENSIONS ARE IN MILLIMETERS. DIMENSIONS IN BRACKETS [ ] ARE INCHES.

UNLESS OTHERWISE SPECIFIED, DIMENSIONS DO NOT INCLUDE PLATING.

TOLERANCING TO BE INTERPRETED IN ACCORDANCE WITH ANSI Y14.5M-1994.

Ⓒ	DENOTES CRITICAL CHARACTERISTICS.
CPK	DENOTES CPK DIMENSIONS. -MINIMUM CPK VALUE.
(ST)	DENOTES A CHARACTERISTIC THAT PROVIDES AN INDICATION OF PROCESS PERFORMANCE. PROCEDURE FOR MEASUREMENT AND TRACKING TO BE DEFINED IN LITTELFUSE INSPECTION INSTRUCTIONS.
CP	DENOTES CP DIMENSIONS. -MINIMUM CP VALUE MUST BE WITHIN THE DIMENSIONAL LIMITATIONS SHOWN ON DRAWING AND INITIALLY LOCATED TO ALLOW FOR MAXIMUM TOOL LIFE

D

MATL SPEC	FINISH	
DRW	DATE	SCALE
GLAB	05/25/05	2:1

TOLERANCE UNLESS OTHERWISE SPECIFIED
ONE PLACE DEC ±0.3 [.012] THREE PLACE DEC ±0.050 [.002]
TWO PLACE DEC ±0.13 [.005] ANGULAR ±1°

3RD ANGLE PROJECTION

TITLE
MIDIFUSE HOLDER

Littelfuse®
DES PLAINES, ILLINOIS 60018

REVISION B

DRWG. NO. 04980900ZXT THRU 04980915ZXT

OUTLINE

CAD GENERATED DRAWING – NO PENCIL CHANGES ALLOWED