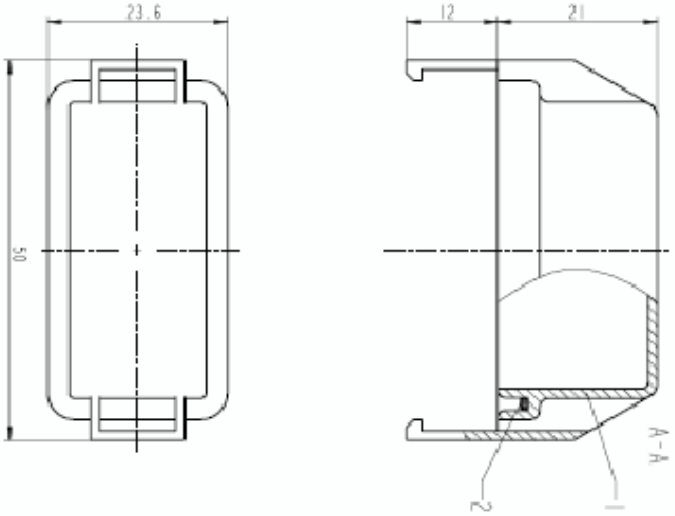

METRIC

COMPONENT

UNLESS OTHERWISE SPECIFIED, DIMENSIONS ARE IN MILLIMETERS.
DIMENSIONS IN BRACKETS [ ] ARE INCHES

UNLESS OTHERWISE SPECIFIED, DIMENSIONS DO NOT INCLUDE PLATING.

◎	DENOTES CRITICAL CHARACTERISTICS.
CPK	DENOTES CPK DIMENSIONS, -MINIMUM CPK VALUE
ST	DENOTES A CHARACTERISTIC THAT PROVIDES AN INDICATION OF PROCESS PERFORMANCE. PROCEDURE FOR MEASUREMENT AND TRACKING TO BE DEFINED IN LITTELFUSE INSPECTION INSTRUCTIONS
CP	DENOTES CP DIMENSIONS, -MINIMUM CP VALUE MUST BE WITHIN THE DIMENSIONAL LIMITATIONS SHOWN ON DRAWING AND INITIALLY LOCATED TO ALLOW FOR MAXIMUM TOOL LIFE

NO	COMPONENT NO	DESCRIPTION	QTY/M	U/M

BILL OF MATERIAL

LTR	DATE	REVISION
A	03/20/09	008368ER-RELEASE GMB

COPIES TO

1	9	18
2	10	19
3	12	20
4	13	21
5	14	23
6	15	33
7	16	43
8	17	53

MATL SPEC: CLEAR POLYCARBONATE (SEAL IS SILICON MVQ 40 ±5 SHORE A)

FINISH

DRW GMB	DATE 03/20/09	SCALE N/A
CHK	DATE	SUPER DR
APPD	DATE	FINSH GOOD WT GRAMS/PIECE

TOLERANCES UNLESS OTHERWISE SPECIFIED (REF. ISO 2768-CHI

DIMENSION	0.5 - 3 (UP TO)	3 - 6 (OVER, UP TO)	6 - 30 (OVER, UP TO)	30 - 120 (OVER, UP TO)	120 - 400 (OVER, UP TO)
TOLERANCE	±0.05	±0.05	±0.1	±0.15	±0.2

3RD ANGLE PROJECTION

TITLE: COVER

CHK

APD

Littelfuse®
DES PLAINES, ILLINOIS 60016

REVISION	DRWG. NO.	OUTLINE
A	01520903U	

CAD GENERATED DRAWING - NO PENCIL CHANGES ALLOWED