MM	IN
4.85	.191
5.11	.201
9.65	.380
13.46	.530
15.74	.620
21.33	.840

4721

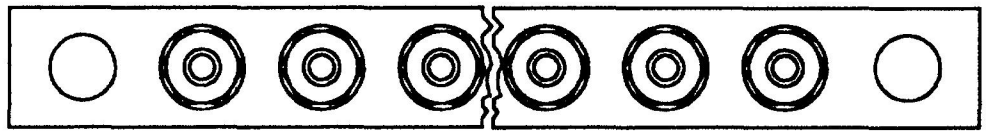

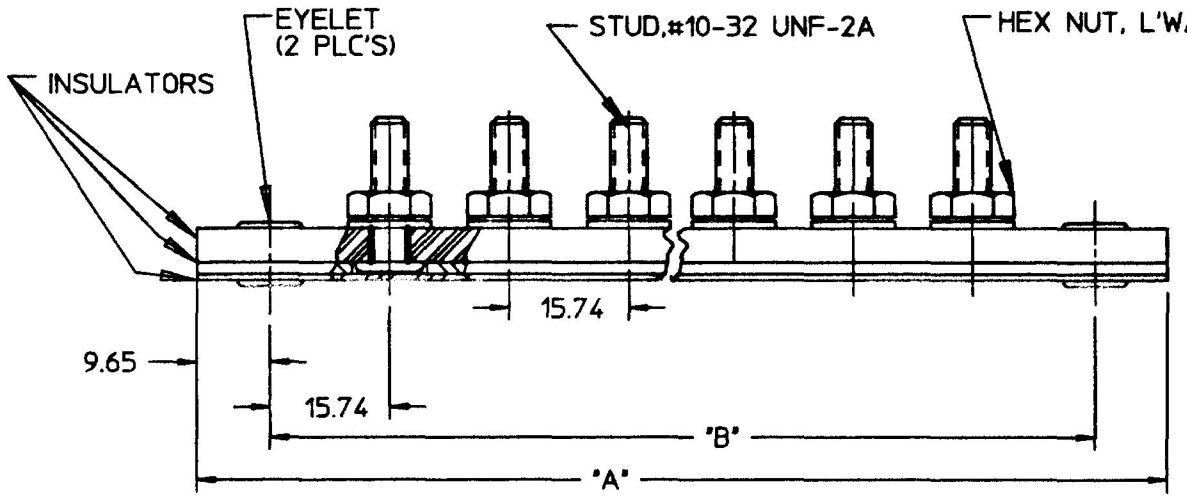

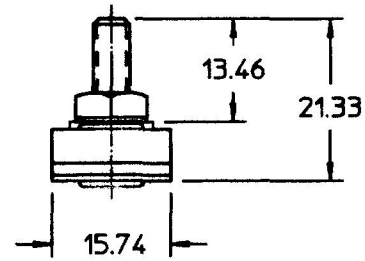

(R)

PART NO	NO OF TERM	IN	MM	IN	MM
		A		B	
4721-P14	14	10.12	257.04	9.37	237.99
4721-P12	12	8.87	225.29	8.12	206.24
4721-P10	10	7.62	193.54	6.87	174.49
4721-P8	8	6.37	161.79	5.62	142.74
4721-P7	7	5.75	146.05	5.00	127.00
4721-P6	6	5.12	130.04	4.38	111.25
4721-P5	5	4.50	114.30	3.75	95.25
4721-P4	4	3.87	98.29	3.12	79.24
4721-P3	3	3.25	82.55	2.50	63.50
4721-P2	2	2.62	66.54	1.87	47.49

METRIC

(Q) NOTES:
1. PARTS TO BE BAGGED

DO NOT SCALE

LET.	WAS	DATE	BY	LET.	WAS	DATE	BY
				R	ECN #99619	12/01/99	JF
				Q	ECN #99504	10/20/99	JF
				P	PUT ON CAD ECN #26936	7/23/97	AJS

MATERIAL	DRAWN	CHK	APVD	SCALE	DATE DRAWN
N/A	SN	DPZ	N/A	1:1	12/6/49

FINISH: N/A

TOLERANCES: DECIMAL ± N/A; ANGLE ± N/A

Cole Hersee Co.
20 OLD COLONY AVENUE, BOSTON, MA., U.S.A., 02127

TERMINAL BLOCK

DATE BLUEPRINTED

4721

Confidential Property of Cole Hersee