MM	IN
.25	.010
12.70	.500
13.71	.540
17.27	.680
21.08	.830
24.38	.960
30.22	1.190
36.83	1.450
40.68	1.601
43.18	1.700

EX18946-J

57003-16

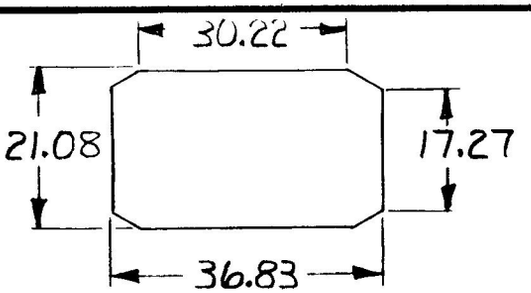

MTG. HOLE DETAIL

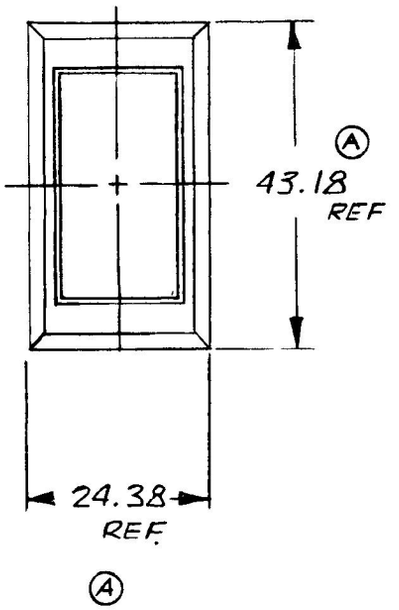

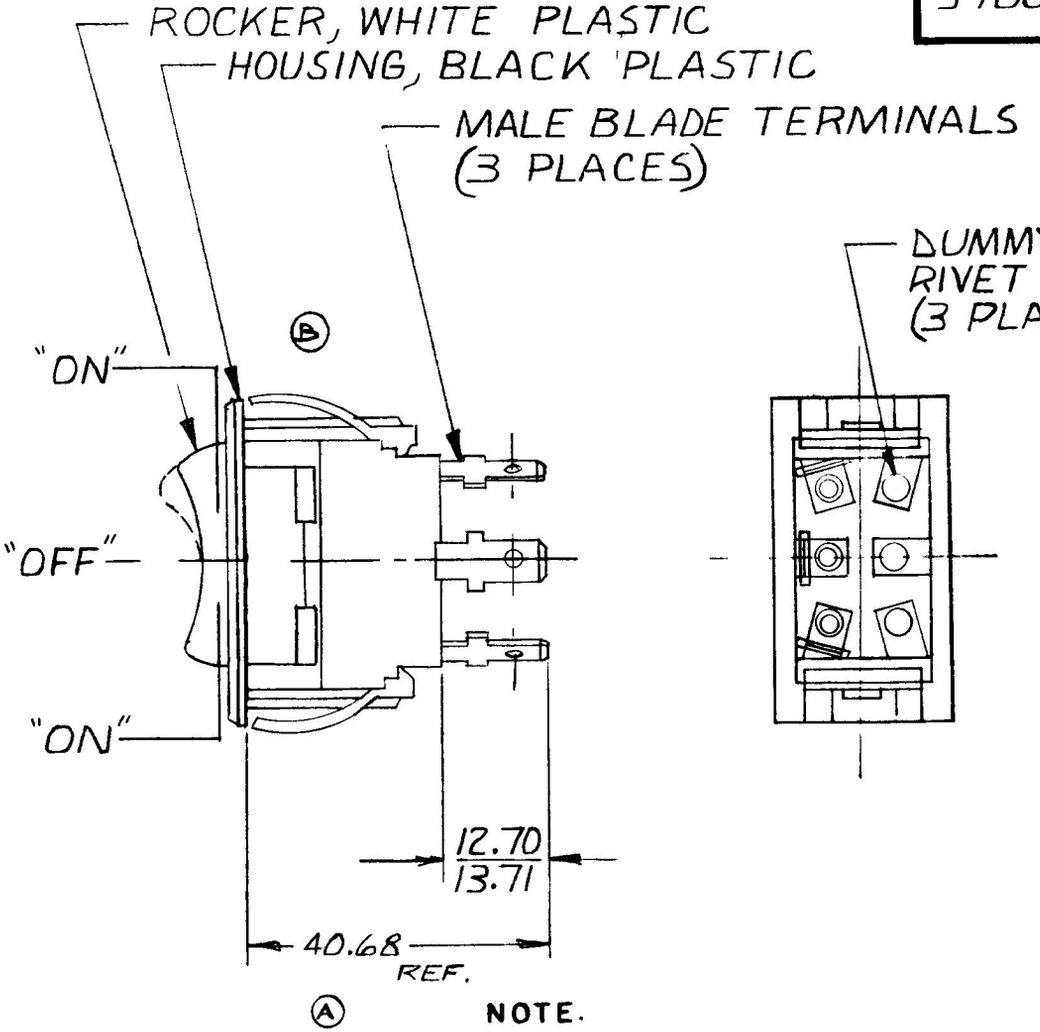

NOTE.
1. WEATHERPROOF
2. SILVER CONTACTS
3. HEAVY DUTY
4 25 AMPS @ 12V DC LAMP LOAD

METRIC

DO NOT SCALE

LET	WAS	DATE	BY	LET	WAS	DATE	BY
				B	ECN 23335	12-11-86	ZD
					ISSUED	10-7-81	RJR
				A	REVISED	4-21-81	EA

MATERIAL —//—

FINISH —//—

TOLERANCES
DECIMAL ±
METRIC ± .25

DRAWN R | CHECKED 8-22-80 | APPRV D | SCALE 1:1 | 57003 01 W/S ATHERPROOF

Cole Hersee Co.
20 OLD COLONY AVENUE SOUTH BOSTON MA U.S.A. 02127

S.P.D.T. ROCKER SWITCH

DATE DRAWN 7-31-80

DATE BLUEPRINT

57003-16

CH-188(4-78)

Confidential Property of Cole Hersee