THIS DRAWING AND THE INFORMATION CONTAINED WITHIN IT ARE CONFIDENTIAL AND MAY NOT BE COPIED OR DISCLOSED WITHOUT THE WRITTEN PERMISSION OF LITTELFUSE.

REVISIONS				
ZONE	REV.	DESCRIPTION	DATE	APPROVED
	A	PCO #5300036. INITIAL RELEASE. DSILVA.	3/8/2022	L.ARGIL

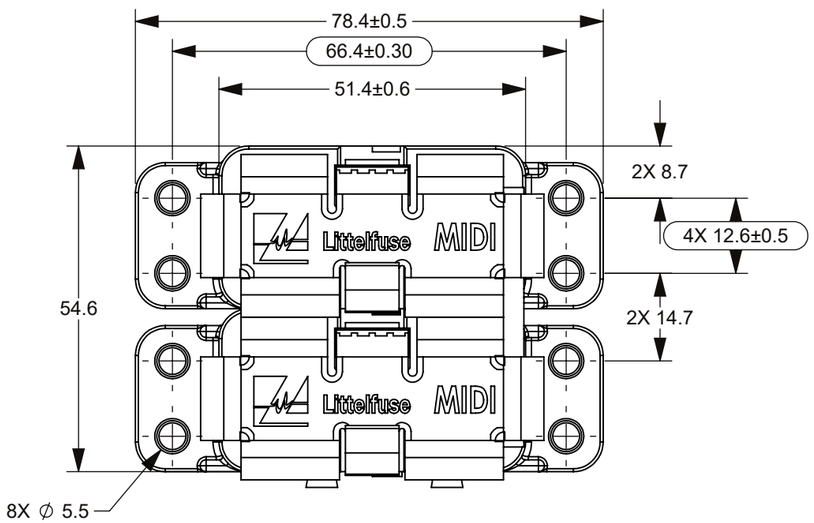

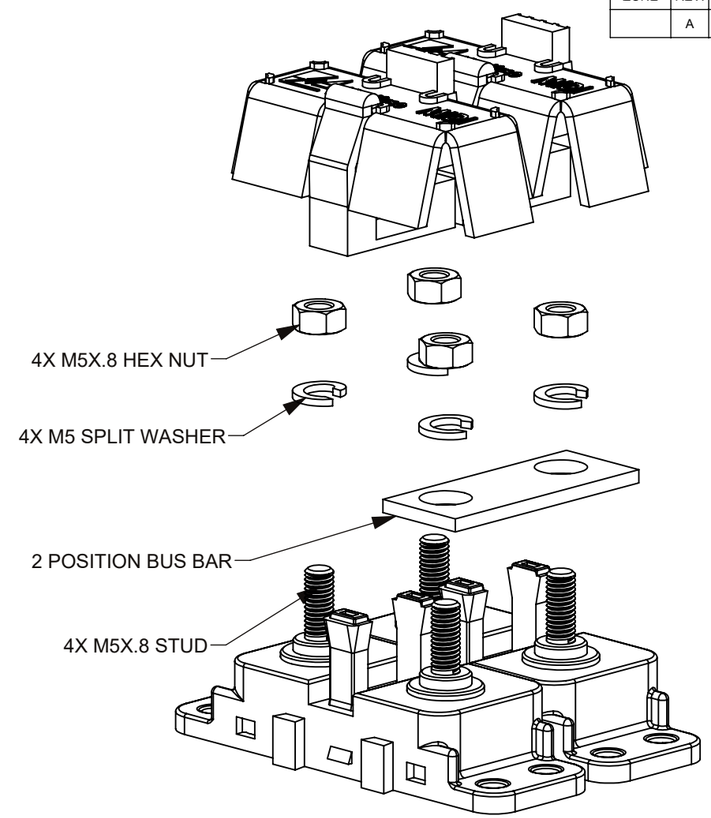

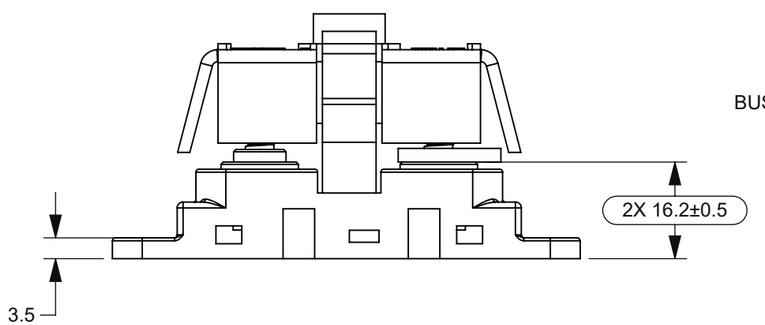

THIS VIEW IS WITHOUT COVER

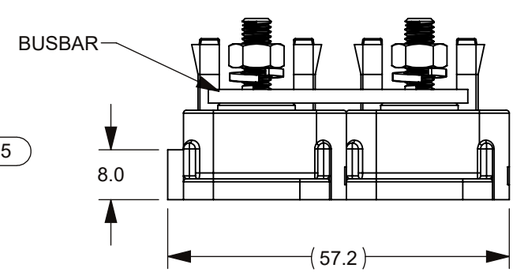

NOTES:
1. MATERIAL:
   1. BASE: NYLON66
   2. BUSBAR: COPPER ALLOY
   3. COVER: THERMOPLASTIC VULCANIZATE (TPV)
   4. M5 STUDS: M5X0.8 STEEL ALLOY, ZINC PLATING
   5. HEX NUTS: M5X.8 STAINLESS STEEL
   6. WASHERS: SPLIT, M5 CARBON STEEL
2. M5 STUD TORQUE: 10 NM MINIMUM
3. MOUNTING TAB TORQUE: 10 NM MINIMUM USING M4 HARDWARE
4. MAX FLASH: 0.2mm

NO.	COMPONENT NO.	COMPONENT NAME	QTY	UM
2	-	MIDI FLEX HOLDER SA	2	EA
1	882-267-002	2 POSITION BUS BAR	1	EA

TOLERANCES UNLESS OTHERWISE SPECIFIED (REF. ISO 2768-mK)

.5 to 3	>3 to 6	>6 to 30	>30 to 120	>120 to 400								ANGLE
±0.10	±0.10	±0.20	±0.30	±0.50								NONE

UNLESS OTHERWISE SPECIFIED, DIMENSIONS ARE SHOWN IN MILLIMETERS.
DIMENSIONS IN BRACKETS [ ] ARE INCHES

PER CH-NPD20-0008 PROCEDURE

●	FIT/ FUNCTION CRITICAL CHARACTERISTICS
<S>	SAFETY/ COMPLIANCE CRITICAL CHARACTERISTICS SYMBOL
CPK	DENOTES CPK DIMENSIONS MINIMUM CPK VALUE
⟨ST⟩	DENOTES A CHARACTERISTIC THAT PROVIDES AN INDICATION OF PROCESS PERFORMANCE.PROCEDURE FOR MEASUREMENTAND TRACKINGTO BE DEFINED IN LITTELFUSE INSPECTION INSTRUCTIONS
CP	DENOTES CP DIMENSIONS, -MINIMUM CP VALUE MUST BE WITHIN THE DIMENSIONAL LIMITATIONS SHOWN ON DRAWING AND INITIALLY LOCATED TO ALLOW FOR MAXIMUM TOOL LIFE

	NAME	DATE
DRAWN	DSILVA	2/2/2022
CHECKED	-	-
	-	-
	-	-

FORM NO: CVP-PE40-0003 REV B

THIRD ANGLE PROJECTION

DO NOT SCALE DRAWING

Littelfuse
Expertise Applied | Answers Delivered

TITLE
FLEX-MIDI FUSE HOLDER
2 POSITION ASSY (NO FUSE)

SIZE	DWG. NO.	REV.
B	OUTLINE OL-04982001ZXFC	A

SCALE 1:1 SHEET 1 OF 1