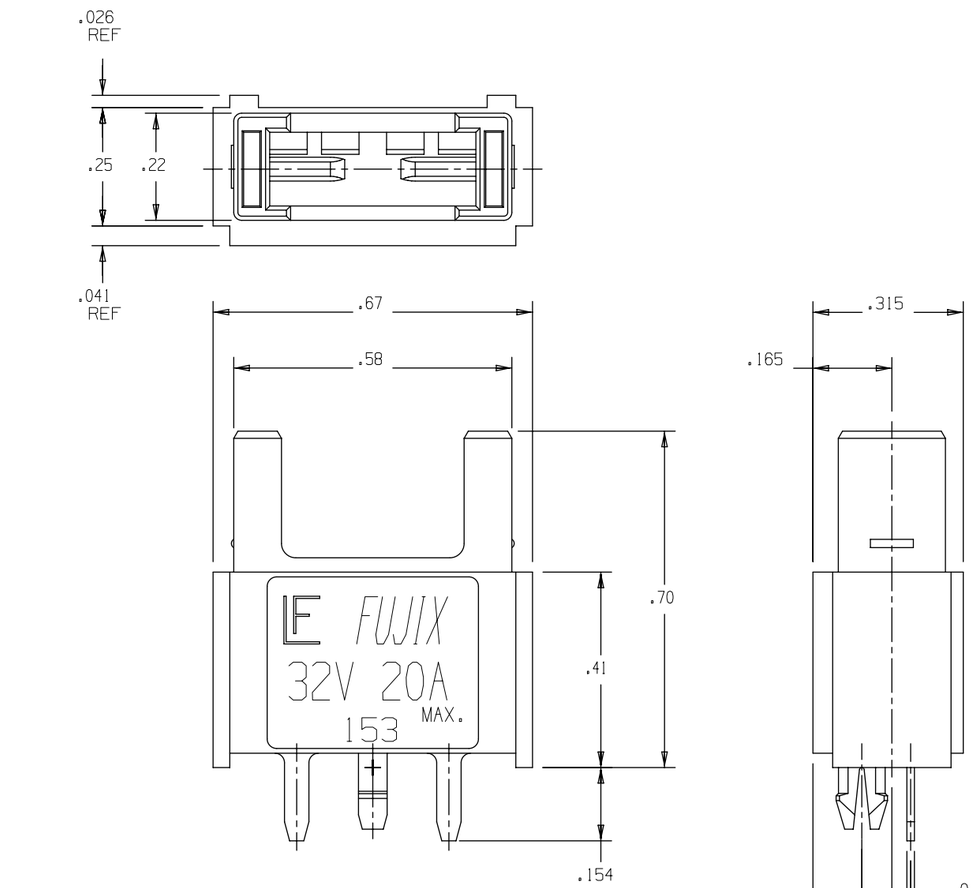

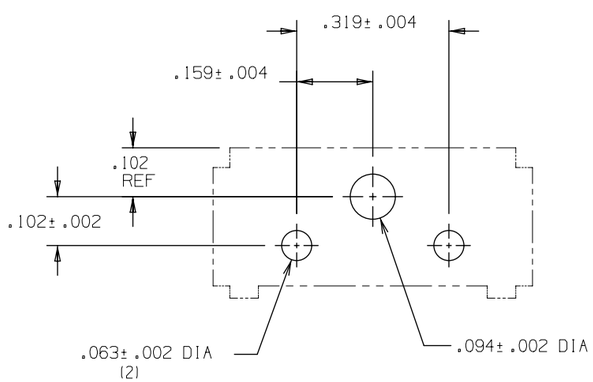

RECOMMENDED P.C.B. LAYOUT
(MOUNTING SIDE)

MATERIAL:
BODY-BLACK GLASS FILLED
THERMOPLASTIC (UL94V-0).
CLIP COPPER ALLOY, TIN PLATE FINISH

TOLERANCES:
TWO PLACE DEC ±.01
THREE PLACE DEC ±.005

METRIC
ASSEMBLY

UNLESS OTHERWISE SPECIFIED, DIMENSIONS ARE IN INCHES.

UNLESS OTHERWISE SPECIFIED, DIMENSIONS DO NOT INCLUDE PLATING.

S	CRITICAL CHARACTERISTIC FOR PART SAFETY/COMPLIANCE.
●	CRITICAL CHARACTERISTIC FOR PART FIT/FUNCTION.
CPK	CPK DIMENSION. 1.67 MINIMUM CPK VALUE ON NEW TOOLING.
ST	STATISTICAL PROCESS CONTROL DIMENSION. THIS DIMENSION INDICATES PROCESS PERFORMANCE. DATA SHALL BE TRACKED AND ANALYZED AT PERIODIC TIMES, ACC. TO CONTROL PLAN.
CP	CP DIMENSION. 1.67 MINIMUM CP VALUE. MUST BE INITIALLY LOCATED TO ALLOW FOR MAXIMUM TOOL LIFE.
●	CUSTOMER-DESIGNATED CHARACTERISTIC. REQUIREMENT FOR EACH SYMBOL TO BE DEFINED IN A CONVERSION TABLE.
C	CLAMP DIMENSION. PARTS SHALL BE SECURED BEFORE TAKING DIMENSIONAL MEASUREMENTS. FIXTURING DATUMS & PROCEDURES TO BE DEFINED IN NOTES OR SEPARATE PROCESS DOCUMENTS.

MATL SPEC -

FINISH -

DIMENSIONS & TOLERANCES ACC. TO ASME Y14.5-2009

3RD ANGLE PROJECTION

SCALE -

DRW OPL

CHK MZAM

DATE 12/JAN/18

SIZE B

TOLERANCES UNLESS OTHERWISE SPECIFIED

LINEAR DIMENSIONS					ANGLES	RADII
DIM	.5 - 6	OVER 6 - UP TO 30	OVER 30 - UP TO 120	OVER 120 - UP TO 400	±0.5°	±0.2
TOL	±0.1	±0.2	±0.3	±0.5		

TITLE MINIFUSE SINGLE VERTICAL MOUNT P.C.B. HOLDER

Littelfuse® CHICAGO, USA 773-628-1000

REVISION A

DRWG. NO. OL-0153003Z

LTR	DATE	REVISION	DRW
A	12/JAN/18	518732GCA-RELEASE	OPL