MM	IN
34.04	1.340
36.57	1.440
60.70	2.390
74.16	2.920

M550

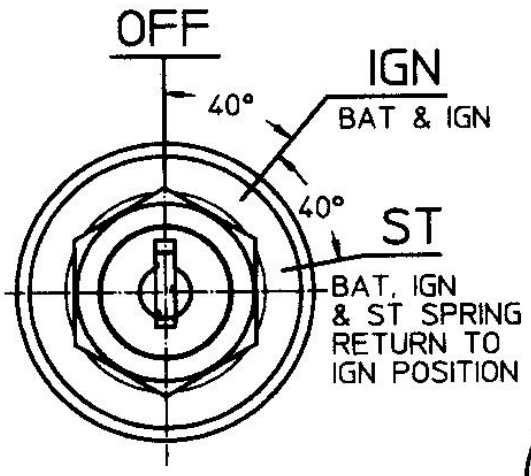

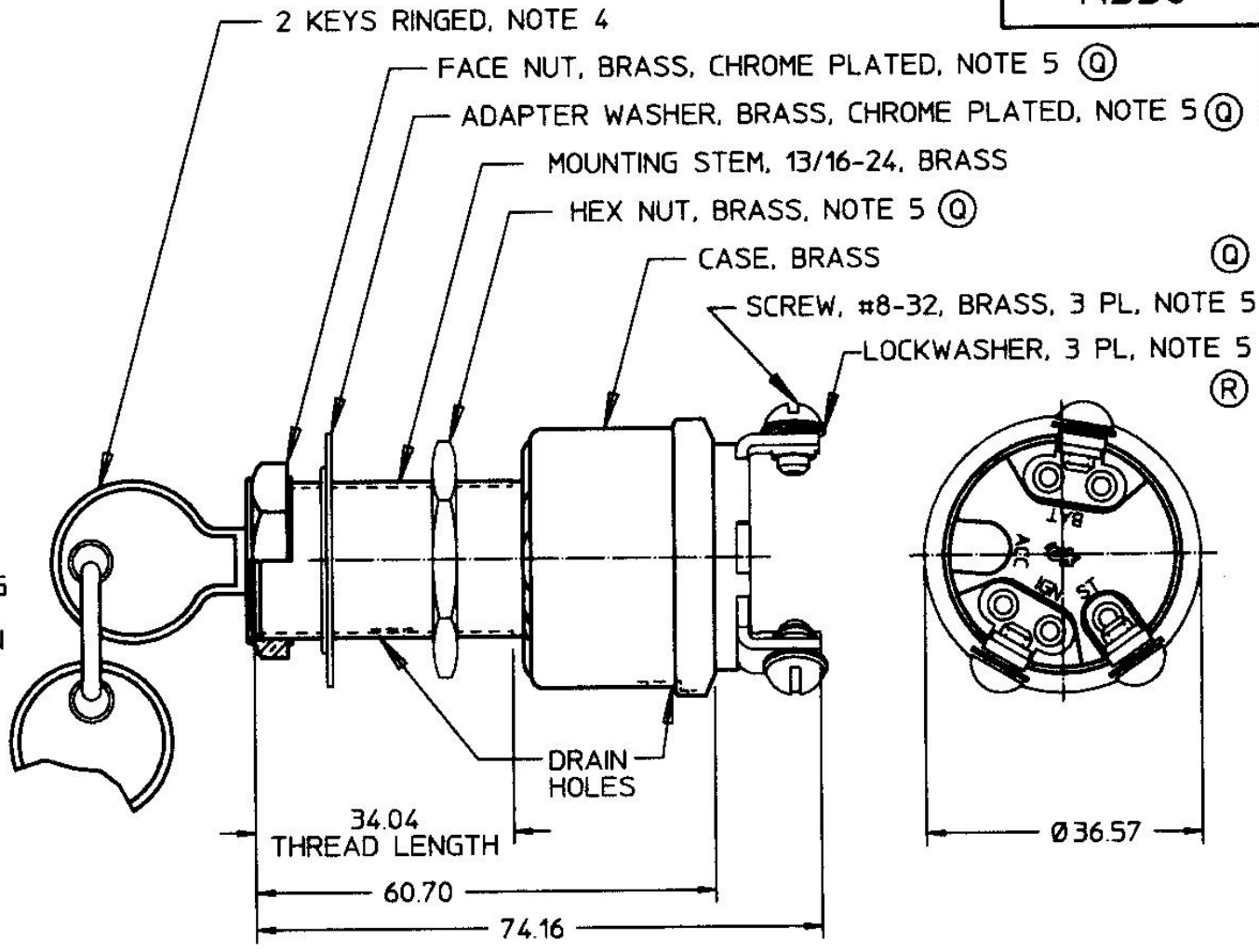

NOTES:
1. ALL DIMENSIONS ARE REFERENCE ONLY
2. RATING: 12V DC, 10 AMPS PER CIRUIT, 15 AMPS MAX
3. APPLICABLE SAE STANDARD OR RECOMMENDED PRACTICE SAE J259
4. LOCK & KEYS SUPPLIED IN RANDOM KEY CODES: CH-501, CH-502, CH-503, CH-504, CH-505 CH-506, CH-510, CH-512, CH-516, CH-523
Q 5. PARTS MAYBE ASSEMBLED OR SUPPPLIED IN A PLASTIC BAG

Confidential Property of Cole Hersee

METRIC

DO NOT SCALE

LET.	WAS	DATE	BY	LET.	WAS	DATE	BY
				R	ECN #98118 ADDED L'WSHR	2/11/98	JMP
				Q	ECN #26813	7/16/97	AJS
				P	PUT ON CAD	7/26/96	DPS

MATERIAL	DRAWN	CHK	APVD	SCALE		DATE DRAWN
	DPS	TY		1:1		2/4/78
FINISH	Cole Hersee Co. 20 OLD COLONY AVENUE, BOSTON, MA., U.S.A., 02127					DATE BLUEPRINTED
TOLERANCES DECIMAL ± ANGLE ±	SW, ROT, IGN					M550