LED

Lighting Surge Protection Modules Design and Installation Guide

Littelfuse®

Expertise Applied | Answers Delivered

LED Lighting Surge Protection Modules Design and Installation Guide

Table of Contents	Page
Introduction	3
Indirect Lightning-Induced Surge	3-5
Regional Differences in Lightning Frequency	6-7
Components That Protect Against Induced Surge Events	8
Modular Solution vs. a Solution Embedded into the Power Supply Unit	9
Thermally Protected MOV for SPD Safety	9
Over-voltage Testing in UL 1449 and IEC 61643-11	10-15
Coordination between the SPD and the Power Supply Unit to Reduce "Surge Let-through"	16-17
Power Supply Unit Design Considerations (Fuse, Equivalent Resistance, TVS Diode)	18-19
Wiring Guide	20-21
Installation Guide	22
Legal Disclaimers	23

© 2016 Littelfuse, Inc.

Specifications descriptions and illustrative material in this literature are as accurate as known at the time of publication, but are subject to changes without notice. Visit **littelfuse.com** for more information.

Introduction

LED lighting is increasingly replacing legacy light sources (mercury vapor, metal halide and sodium vapor) in outdoor applications as a result of technological revolutions in LED efficiency (higher lumens per watt), secondary optics (better lenses/reflectors), and greater thermal dissipation. However, the initial cost of installing outdoor LED lighting can be substantial; this cost is justified and payback is established based on the lower wattage demand, lower maintenance cost, and longer lifetime it offers. In order to protect outdoor LED lighting from failing within an investment payback period of about five years, the lighting must offer high durability and reliability. Transient surge events in AC power lines, which can damage lighting fixtures, represent a significant threat to outdoor LED lighting installations.

Indirect Lightning-Induced Surge

When nearby electrical equipment is switched on or off, over-voltage transient surges can occur in AC power lines. Nearby lightning strikes can also generate transient surges in AC power lines (***Figure 1***), especially in outdoor environments.

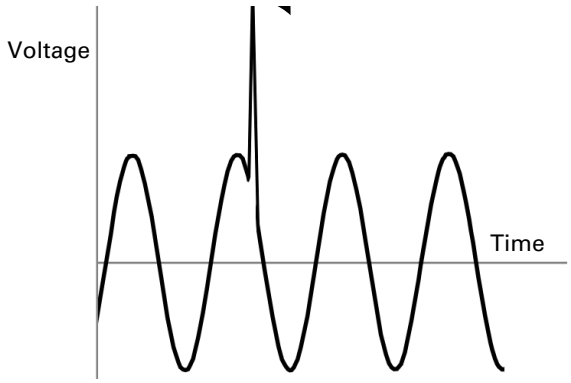

Figure 1. Transient over-voltage on an AC power line resulting from an indirect lightning strike.

Lightning strikes are electrostatic discharges, which usually travel from cloud to cloud or cloud to the ground, with magnitudes of millions of volts (***Figure 2***). Indirect lightning strikes, even those that occur several miles away, can induce magnetic fields that generate surges of thousands of volts through current-carrying copper wires, such as the overhead and underground cables that power streetlights. These indirect strikes, which produce levels of energy with magnitudes greater than $1000A^2s$, can be characterized with specific waveforms.

Indirect Lightning-Induced Surge (continued)

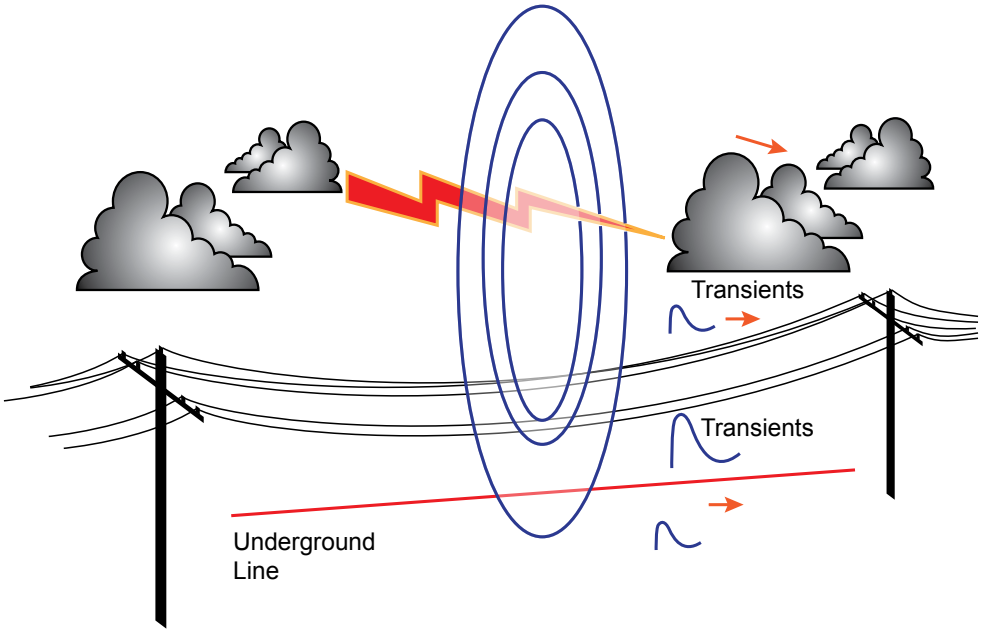

Figure 2. Indirect lightning strikes can induce magnetic fields in overhead and underground power lines that produce over-voltage transient surges.

The surges produced by electrical storms can adversely affect outdoor LED lighting installations. The luminaire (the combination of a module or a light engine with control gear to form a lighting system) is susceptible to damage both in the differential and common modes:

- **Differential Mode** – High voltage/current transients between the Line-Neutral (L-N) or Line-Line (L-L) terminals of the luminaire could damage components in the power supply unit or the LED module board.
- **Common Mode** – High voltage/current transients between the L-G (earth) or N-G (earth) terminals of the luminaire could damage safety insulation in the power supply unit or LED module board, including the LED to heat sink insulation.

Based on site surveys and statistics on years of lightning strike data in the United States, the IEEE (Institute of Electrical and Electronics Engineers) recommends test criteria for induced surge waveforms and energy levels for indoor/outdoor locations (Category A/B/C). The IEEE recommendations were then referred to by ANSI (the American National Standards Institute) and the DOE (Department of Energy) when testing standards were established in the United States.

Indirect Lightning-Induced Surge (continued)

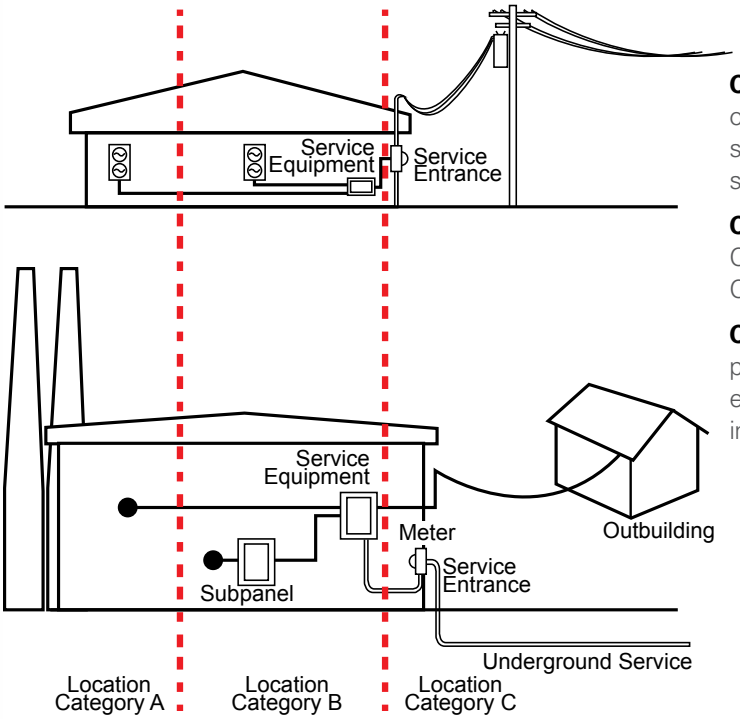

Category A: Parts of the installation at some distance from the service entrance

Category B: Between Category A and Category C

Category C: External part of structure, extending some distance into the building

Figure 3. Location categories defined by IEEE standards for surge environments.

The U.S. Department of Energy (DOE) Municipal Solid State Street Lighting Consortium (MSSLC) has developed a model specification that ensures roadway LED luminaires and parking lot and garage LED lighting exhibit adequate surge immunity to withstand indirect lightning energy. Cities, municipalities, and utilities in North America are adopting this model specification in their Requests for Quotes (RFQs) for lighting retrofit and replacement projects. The DOE specification details performance and surge suppression requirements as shown in ***Table 1*** for two levels, Location Category C Low and C High.

Table 1. 1.2/55µs - 8/20µs Combination Wave Specification

Parameter	Test Level/ Configuration
1.2/50µs Open Circuit Voltage Peak	Low: 6 kV. High: 10kV*
8/20µs Short Circuit Current Peak	Low: 3 kA. High: 10kA
Coupling Modes	L1 toPE, L2 to PE, L1 to 72
Polarity and Phase Angle	Positive at 90° and Negative at 270°
Test Strikes	5 for each Coupling Mode and Polarity/Phase Angle combination
Time Between Strikes	1 minute
Total Number of Strikes	= 5 strikes × 3 coupling modes × 2 polarity/phase angles = 30 total strikes

*This is a MINIMUM requirement. Note that for most combination wave generators, which have a source impedance of 2Ω, the generator charging voltage will need to be raised above the specified level (to somewhere in the vicinity of 20kV) to obtain the specified current peak.

The DOE test waveform used to evaluate surge immunity of luminaires used in outdoor lighting (***Figure 4***) is a combination 1.2x50µs open circuit voltage and 8x20µs short circuit current waveform. To perform this test, the specified peak current is calibrated on the surge generator by shorting the output to ground prior to connection to the luminaire.

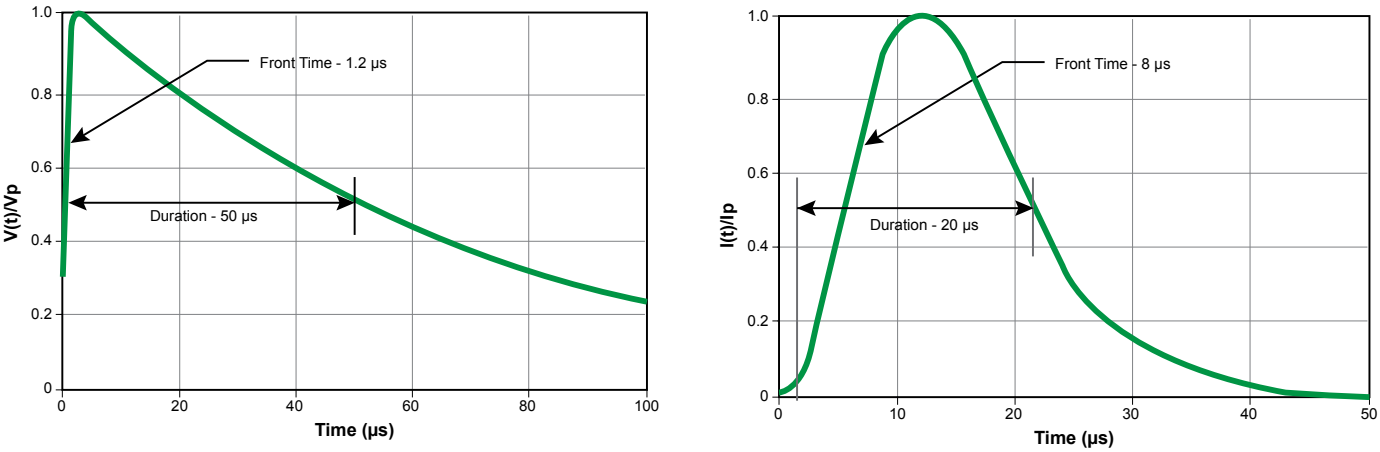

Figure 4. Open-circuit voltage and short-circuit current waveforms to represent transient surges on an AC power line. Vp and Ip represent the peak voltage and current, respectively.

Regional Differences in Lightning Frequency

Lightning frequency may refer to the number of lightning strikes in a region during a particular period or to the probability quotient of lightning strike frequency.

Satellite-based Lightning Imaging Sensor (LIS) observations are used to study lightning activity in different regions of the world. This research has shown clear differences in both flash frequency and optical radiance in different regions. The flash activity in different regions shows a clear difference, corresponding to the local climate, topography, and environment conditions.

IEEE studied the effect of indirect lightning on outdoor lighting and recommended transient surge testing levels (3kA and 10kA) for the United States. For other regions for which lighting survey data and regional regulations aren't available, NASA's research on worldwide lightning strike frequency (***Figure 5***) may be useful as a reference for comparison. Central and South America, Africa, Southern and Southeastern Asia have lightning strike frequencies similar to Florida in the United States, so an equivalent surge immunity level (10kA) is suggested. For regions with fewer lightning strikes, such as Europe, Eastern Asia, and Australia, a lower surge immunity level could be considered at 3kA.

Regional Differences in Lightning Frequency (continued)

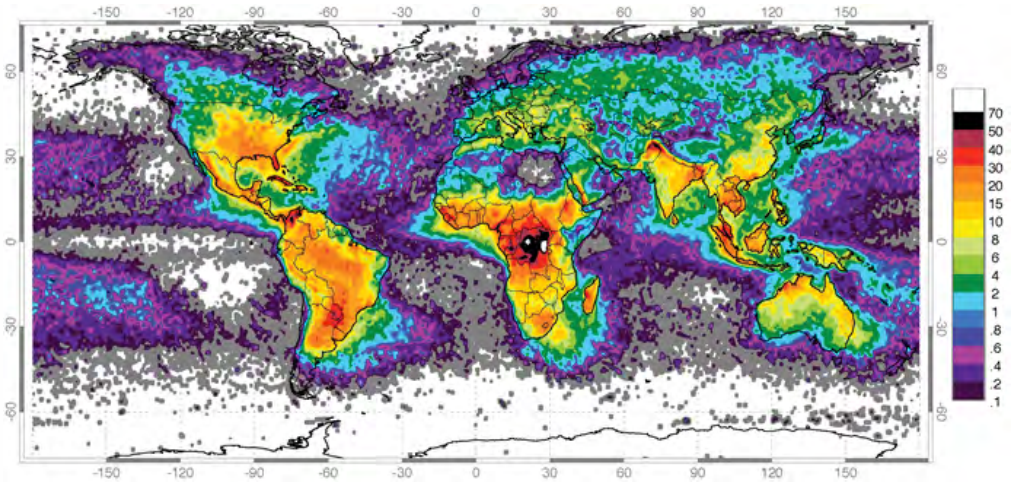

Figure 5. This map of worldwide lightning frequency (courtesy of NASA Global Hydrology Resource Center) depicts the number of lightning flashes/km²/year for various regions.

Incorporating a robust surge suppression circuit in an outdoor LED luminaire can eliminate damage caused by surge energy, enhancing reliability, minimizing maintenance, and extending the useful life of the lighting installation (***Figure 6***). A surge protection subassembly that can suppress excessive surges to lower voltage levels is an optimal way to protect the LED luminaire investment.

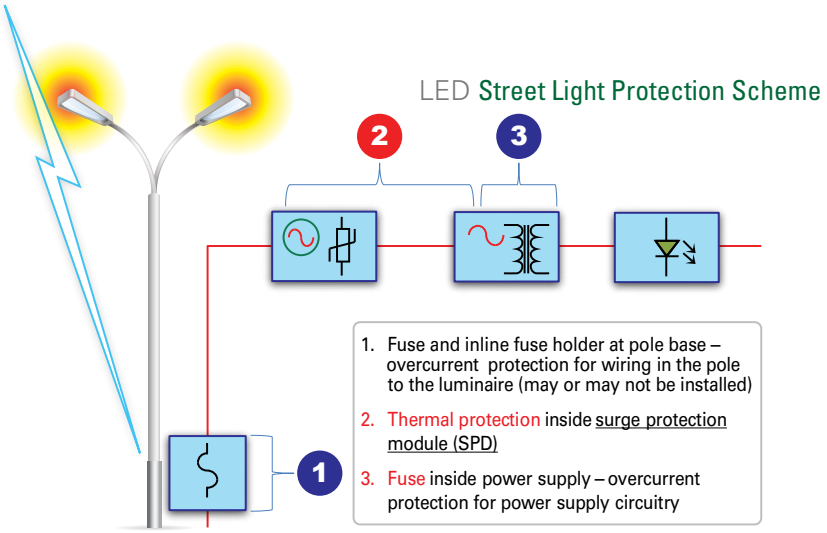

Figure 6. LED street light protection scheme.

Components That Protect Against Induced Surge Events

Protecting outdoor LED lighting from lightning induced surges requires diverting high voltage/current transient interference away from sensitive electronics in the lighting fixture. A variety of surge protective devices (SPDs) are used in outdoor LED lighting to suppress surge energy and minimize surge impact. These include metal-oxide varistors (MOVs), gas discharge tubes (GDTs), and transient voltage suppression (TVS) diodes (***Figure 7***). These components are designed to remain at "standby" in the circuit under normal operation. When an abnormal high-voltage transient occurs, they activate to absorb the transient energy, then return to standby mode.

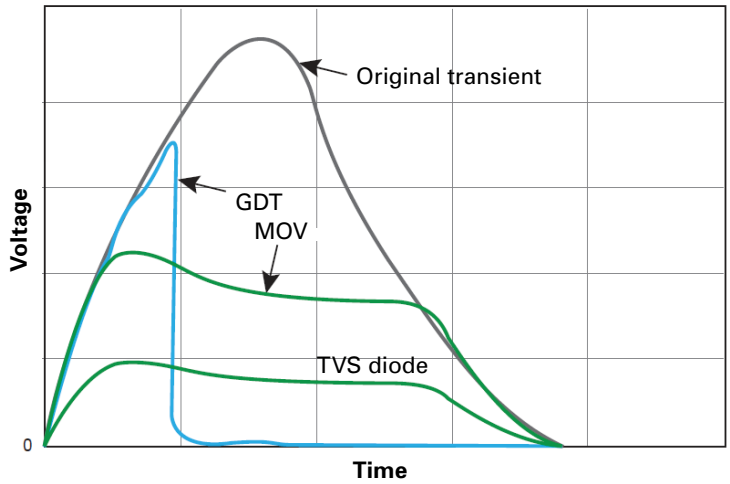

Figure 7. How GDTs, MOVs, and TVS diodes respond to a transient surge to suppress the threat it poses.

Of the technologies outlined in ***Table 2***, MOVs are preferred and widely used for surge protection in power distribution panels due to their high surge energy-handling capability and fast response to transient voltage. Therefore, MOVs are also suitable for use as surge protection devices in outdoor LED lighting applications.

Technology	GDT	MOV	TVS Diode
Surge Handling Capability (8/20µs)	High (1kA~100kA)	High (0.1kA~100kA)	Medium (0.1kA~15kA)
Response Time	Slow (ns)	Fast (ns)	Faster (ps)
Max. Clamping Voltage	High	Medium	Low
Leakage Current	No	Low	Low
Follow-on Current	Yes	No	No
Fatigue	Yes	Yes	No

Table 2. Surge protection device technologies

Modular Solution vs. a Solution Embedded into the Power Supply Unit

Outdoor luminaires are easily affected by transient surges inductively coupled into power lines from lightning strikes. IEEE C62.41.2™-2002 categorizes two different exposure levels for outdoor locations (Category C Low and C High) with different suggested surge levels. Similarly, some regions or countries may have different surge level requirements due to different lightning strike density in the area. Although some LED luminaires feature surge protection devices embedded in the power supply unit, Littelfuse recommends that the surge protection circuit be provided as an independent module that's separate from the luminaire power supply; in this way, the same luminaire can be easily marketed globally by attaching different surge protection modules to meet differing surge level requirements.

MOVs are widely used in surge protection circuits for their fast response times, high surge energy handling, compact size, and cost-effectiveness. However, after MOVs absorb a certain number of surge strikes, they will begin to degrade and can no longer provide the same protection as new ones. Having a separate surge protection module allows for easy replacement when the original module reaches its end of life.

Thermally Protected MOV for SPD Safety

MOV technology is not only inexpensive but also highly effective for suppressing transients in power supplies and many other applications, such as the SPD modules that are often placed upstream from an LED driver.

MOVs tend to degrade gradually after a large surge or multiple small surges. This degradation leads to increasing MOV leakage current; in turn, this raises the MOV's temperature, even under normal conditions like 120Vac/240Vac operating voltage. A thermal disconnect adjacent to the MOV (***Figure 8***) can be used to sense the increase in MOV temperature while it continues to degrade to its end-of-life condition; at this point, the thermal disconnect will open the circuit, removing the degraded MOV from the circuit and preventing it from failing catastrophically.

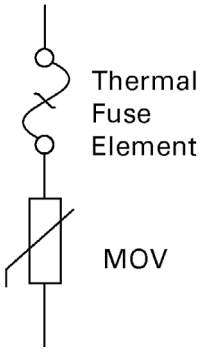

Figure 8. A thermal disconnect can open the circuit, preventing a catastrophic failure of a degraded MOV.

MOVs are designed to clamp fast over-voltage transients within microseconds. However, in addition to short duration transients, MOVs inside SPD modules can experience temporary over-voltage conditions caused by loss of neutral or by incorrect wiring during installation (***Figure 9***). These conditions can severely stress an MOV, causing it to go into thermal runaway; in turn, this will result in overheating, smoke, and the potential for fire. UL 1449 and IEC 61643-11, the safety standards for SPDs, define specific abnormal conditions under which devices must be tested to ensure SPD safety. Robust SPD module designs include thermal disconnects to protect the MOVs from thermal runaway.

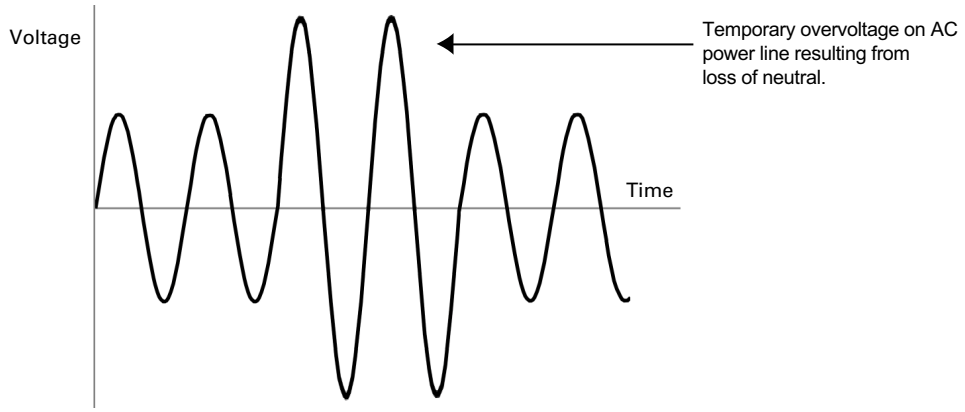

Figure 9. Temporary over-voltage conditions can severely stress MOVs, leading to thermal runaway.

Over-voltage Testing in UL 1449 and IEC 61643-11

UL 1449 Abnormal Overvoltage Test

In AC line applications, the loss of a Neutral-Ground connection may occur in such a way that there exists a risk that a sustained over-voltage may be applied to an MOV that is rated for a much lower continuous voltage. In an unlimited current condition, the MOV will first fail to a low impedance (few Ohms) state, but due to the high amount of energy available, it most often ruptures instantaneously. If, however, there are loads connected to the AC line that limit current flow, the MOV can overheat and potentially cause the SPD device to overheat resulting in smoke, out-gassing and eventually fire.

Over-voltage Testing in UL 1449 and IEC 61643-11 (continued)

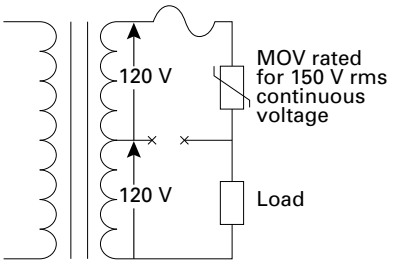

Figure 10. Loss of Neutral-Ground connection in a standard U.S. split-phase power distribution system.

For example, in a standard U.S. 120V AC Line application, two 120V AC power lines (180° out of phase) are commonly fed from a center-tapped 240V transformer. See Figure 10. Let's assume a 150V-rated MOV is present in the top 120V circuit, and some load exists on the bottom 120V circuit. Both the MOV and load share the center tap, which is the Neutral-Ground connection. If a break occurs on the center tap (X—X), then the load in the bottom phase acts as a current limiter, and the line fuse may not clear. In this scenario, the 150V rated MOV is subjected to 240V at a limited current, potentially resulting in thermal runaway for the MOV. Table 44.1 in UL 1449 4th Edition defines the test voltage that should be applied to various SPD devices depending on the designer's desired device rating. (See ***Table 3***.)

Nominal Voltage Rating	Phase	Test Voltage [a]
0–109V	Single	Twice Rated Voltage
110–219V	Single	240
220–229V	Single	380
230–239V	Single	400
240–345V	Single	480
346–399V	Single	600
400–499V	Single	690
500–1000V	Single	Twice Rated Voltage up to Max. 1000V
110–120V / 220–240V	Split	240
120 / 208V	3-WYE	208
220 / 380V	3-WYE	380
230 / 400V	3-WYE	400
220–240 / 380–415	3-WYE	415
240 / 415V	3-WYE	415
254–270 / 440–480V	3-WYE	480
346 / 600V	3-WYE	600
400 / 690V	3-WYE	690
120 / 240V	High leg delta	240
240 / 480V	High leg delta	480
240V	Delta	c
480V	Delta	c
600V	Delta	b

a. For device ratings not specified in the table, the test voltage shall be the maximum phase voltage (if available) or twice the conductor pair voltage rating up to 1000V max.
b. Abnormal Overvoltage Tests are not required to be conducted on 600V delta rated units, but short circuit testing shall be performed.
c. The Short Circuit and Intermediate Current tests are performed at the full phase voltage.

Table 3. Test voltage selection table (reproduced from Table 44.1 in UL 1449 4th Edition).

Over-voltage Testing in UL 1449 and IEC 61643-11 (continued)

IEC 61643-11 Temporary Overvoltage (TOV) Test

Compared to surge transients, which are short-duration (microseconds) over-voltage disturbances in AC power lines, temporary over-voltages (TOVs) are longer-duration (milliseconds to minutes long) abnormal high voltages affecting the SPD module. TOVs can lead to short-circuited SPD modules and thermal runaway, potentially resulting in a catastrophic fire or explosion of the SPD.

Several things can cause TOVs to occur in AC power lines. IEC 61643-11 includes a TOV test in the standard to simulate these possible causes and verify SPD module safety. TOVs are caused by short-circuit faults in the power distribution network and by faults in the low voltage system and the high/medium voltage system.

- TOV caused by faults in the low voltage system
  - **Line-to-Ground Fault. A single line-to-ground fault at one phase shifts the ground potential at the fault location and generates 1.73× (√3) over-voltage at another phase line-to-ground in the worst case. The over-voltage condition continues until an over-current device activates to clear the line-to-ground fault, which usually happens in less than five seconds.**

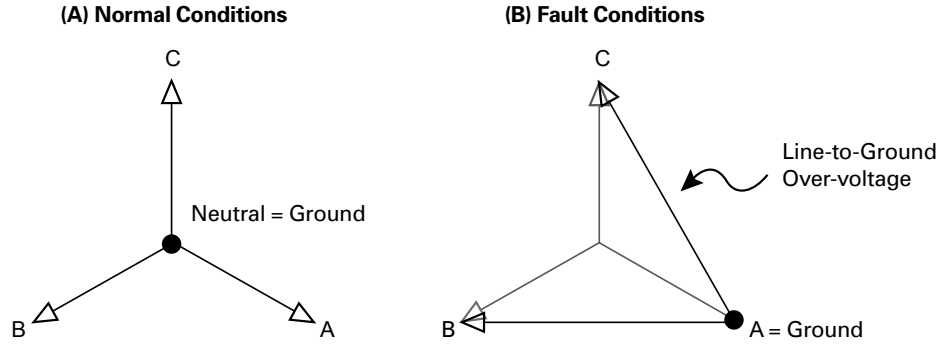

Figure 11. Line-to-ground fault in 3-phase electric power system.

Over-voltage Testing in UL 1449 and IEC 61643-11 (continued)

– **Loss of Secondary Neutral.** **A broken neutral shifts its potential away and may cause a 1.73× (√3) over-voltage at Line-to-Neutral in the worst case.**

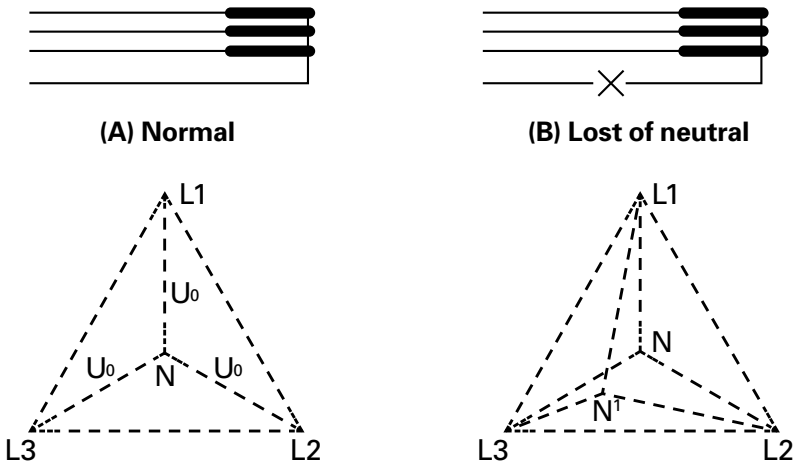

Figure 12. Lost-of-neutral in 3-phase electric power system

- TOV caused by faults in the high/medium voltage system
  When a distribution transformer (for example, 10kV to 380V, as shown in Figure 13) has a short-circuit fault at the high-voltage side (10kV) Line-to-Ground, it generates a high fault current (Id=300A, 200ms duration) through grounding resistor Re (4Ω), which in turn elevates the Neutral potential (Ue=1200V) at the low-voltage side. The TOV test thus intends to simulate a ground fault at the high-voltage system by injecting 1200V into N-G at the SPD module in the low-voltage system.

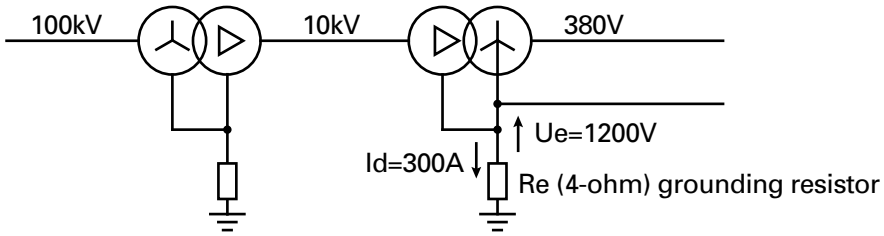

Figure 13. Line-to-ground fault in high/medium voltage transformer

Temporary over-voltages affect SPDs when a short-circuit fault happens in a power network. It is important for SPDs to meet both the UL 1449 and IEC 61643-11 standards to ensure their safety and reliability. The addition of thermally protected MOVs in SPDs not only suppresses transient voltages but also ensures their own safety against overheating and catching fire.

Over-voltage Testing in UL 1449 and IEC 61643-11 (continued)

End-of-Life/Replacement Indication for SPDs

When an MOV becomes overheated due to temporary over-voltage or excessive leakage current, a thermal disconnect may be used to help remove it from the AC circuit. However, with the MOV removed from the circuit, the SPD module no longer provides surge suppression. Therefore, it's important to supply proper indication so that maintenance personnel will know the SPD is not working and requires replacement.

Luminaire designers can choose from two main types of SPD module configurations based on their maintenance and warranty strategies. Those are parallel- and series-connected surge protection subassemblies.

- **Parallel Connection** – The SPD module is connected in parallel with the load. An SPD module that has reached end-of-life is disconnected from the power source while leaving the AC/DC power supply unit energized. The lighting still remains operational, but the protection against the next surge to which the power supply unit and LED module are exposed is lost. In a parallel-connected SPD module, replacement indication can be added through the use of a small LED that indicates the SPD module status to the maintenance technician. Options for a green LED indicating an online SPD module or a red LED indicating an offline SPD module are available. Or, rather than an LED indication at each lighting fixture, the need for SPD module replacement could be indicated remotely to a light management center with SPD module end-of-life indication wires connected to a networked smart lighting system.
- **Series Connection** – The SPD module is connected in series with the load, where the end-of-life SPD module is disconnected from the power source, which turns the light off. The loss of power to the luminaire serves as indication for a maintenance call. The disconnected SPD module not only turns the lighting off to indicate the need for replacement but also isolates the AC/DC power supply unit from future surge strikes. General preference for this configuration is growing rapidly because the luminaire investment remains protected while the SPD module is awaiting replacement. It's far less expensive to replace a series-connected SPD module than the whole luminaire as in the case of a parallel-connected SPD module.

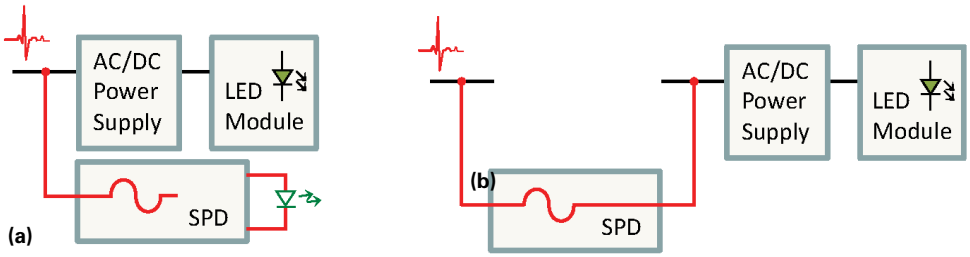

Figure 14. An SPD module that's parallel-connected to a luminaire (a) and an SPD module that's series-connected to a luminaire (b).

Over-voltage Testing in UL 1449 and IEC 61643-11 (continued)

LSP10 Wiring Guide, Parallel Connection with End-of-Life Indication

Apply series-connected models of LSP10 Series thermally protected varistor modules (as indicated by an S suffix in the part number) as parallel connections in the lighting fixture. This turns the output wires of the series-connected SPD modules into end-of-life indication wires.

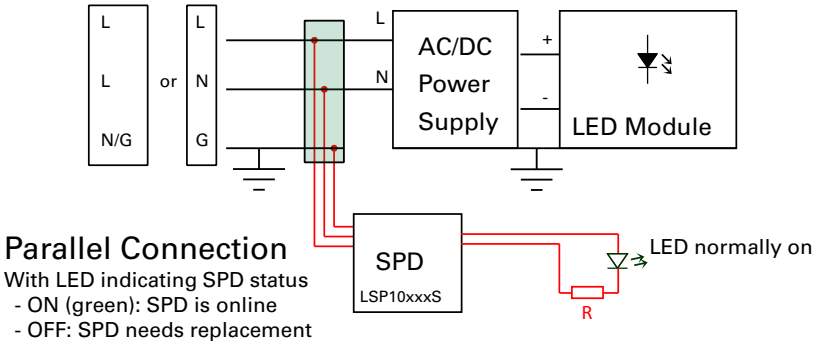

Figure 15. Connect a current limiting resistor and a green LED to form an external indicator of module status. When the green LED is on, the module is working normally. When the green LED is off, the module is disconnected from the power circuit, so it is no longer providing surge protection to downstream devices. It must be replaced with a new one.

LSP05 Wiring Guide, Parallel Connection with End-of-Life Indication

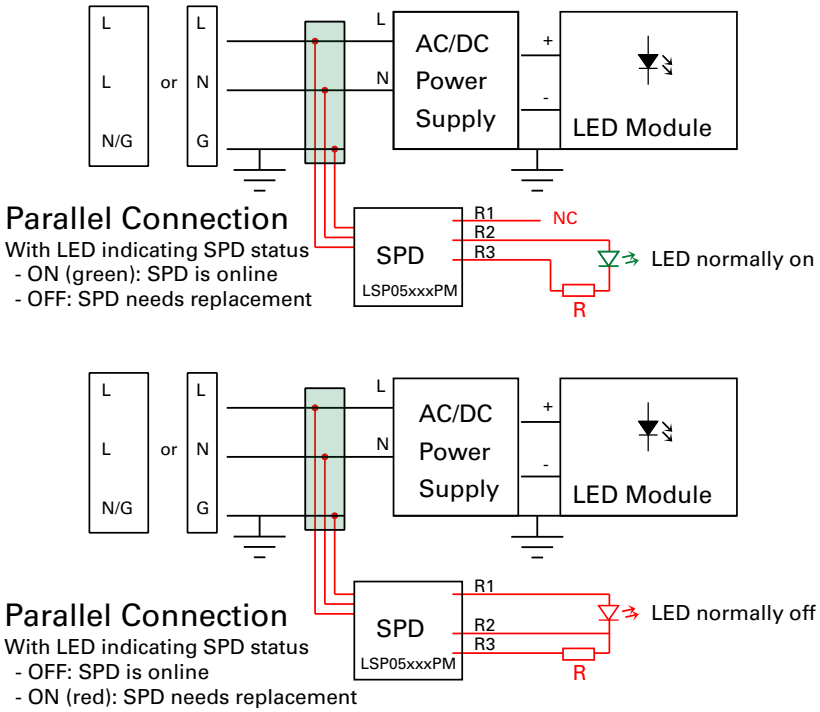

Figure 16. Apply parallel-connected models of LSP05 Series thermally protected varistor modules (as indicated by a PM suffix in the part number) and connect indication wires to a current-limiting resistor and a LED indicator. Either a normally-on green LED or a normally-off red LED could be selected as the LED indicator.

Matching the Resistor to the Indicating LED

Green/red indicating LEDs are available in the market with different form factors, sizes and ratings. Since the LED connected to SPD is fed by AC line voltage, it is important to choose an LED rated to withstand the full AC voltage in the reverse-bias mode. Adding another adequately rated diode to the LED circuit (parallel or series) could also prevent the LED from being damaged by the AC voltage.

The value of the current-limiting resistor is chosen to match the optimal LED driving condition. Its resistance and wattage are determined by the AC line voltage and the desired current for driving the LED. For example, in a 240V AC circuit, a resistor rated 150kΩ and 0.5W will limit the current to 1.6mA to drive the LED. The LED can be driven by a lower current than its full current rating and still illuminate with a minimum brightness level. As long as the brightness is visually acceptable under sunlight, keep the driving current low to save energy by minimizing the power dissipated by the current limiting resistor.

Indication wires from SPDs are electrically energized by AC power line. Unused wires must be capped off by wire nuts to prevent the risk of short circuit or shock hazard.

Coordination between the SPD and the Power Supply Unit to Reduce "Surge Let-through"

Surge Protection Modules and MOV Coordination

Generally, most LED power supplies are a constant current type, and are often referred to as LED drivers. These can be purchased as off-the-shelf assemblies containing MOVs to meet lower level surge requirements. Typically, drivers are rated to handle surges in the range of 1-4kV. The varistor (MOV2 in ***Figure 18***) is usually located downstream of the fuse on the AC mains, and can range from 7 to 14mm in diameter. However, to provide higher level surge immunity, outdoor lighting original equipment manufacturers (OEMs) may want to add surge protection devices (SPDs) on the AC input lines of their luminaires ahead of the LED driver.

Coordination between the SPD and the Power Supply Unit (continued)

Typically, compliance testing of luminaires involves 20kV/10kA surges in North America and up to 10kV/5kA[1] in Europe.

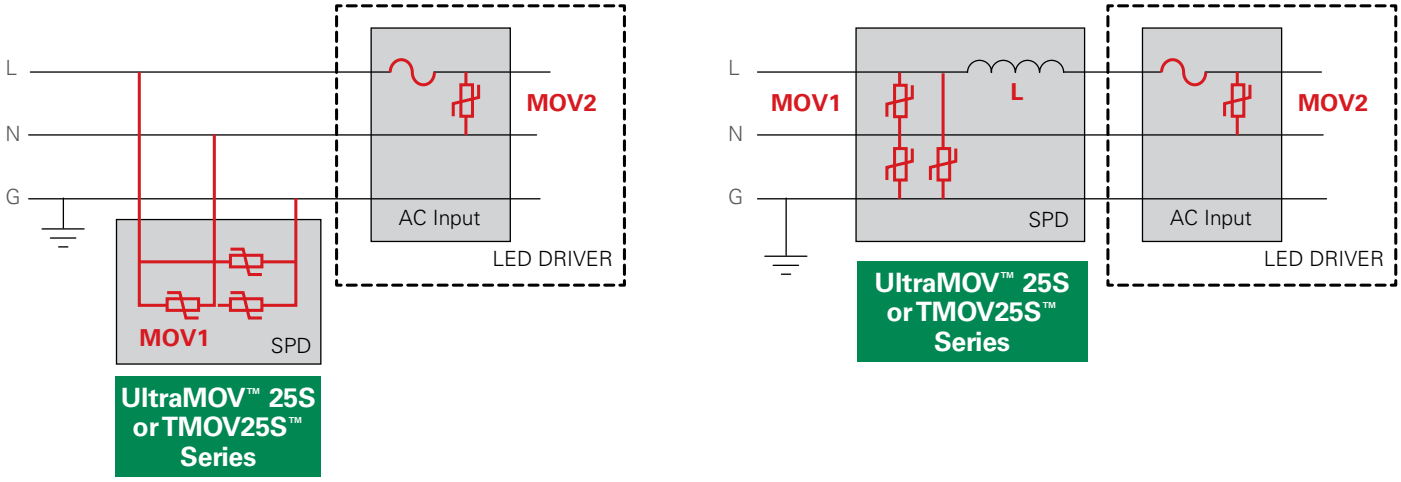

Figure 17. SPD protection schemes that increase the surge immunity of an LED driver.

SPD modules are responsible for protecting luminaires against these high surge levels, which can occur in outdoor lighting environments. The SPDs use 3-4 parallel- or series-connected high-surge-withstand (for example, 25mm or 34mm diameter) MOVs across the AC lines, as shown in the green MOV1 block of ***Figure 17.*** As shown in that figure, the MOVs are installed from Line to Ground, Neutral to Ground and Line to Neutral. For installations in regions with severe lightning exposure, it is common to use parallel-connected MOVs for the Line to Neutral leg. This will increase differential mode surge capability and the reliability of a luminaire.

When adding this supplemental protection in front of the LED driver, it is very important to select (MOV1) characteristics that coordinate with those of the existing (MOV2) device in the driver. The coordination criterion for MOV1 selection is to make sure these larger disc MOVs in the SPD module clamp first, thereby taking the brunt of the surge energy before the smaller (MOV2) disc turns on. This will avoid catastrophic current through the driver MOV and premature opening of the fuse, which happens if the driver MOV turns on first. Therefore, the MOVs in the SPD module should have a lower maximum continuous operating voltage rating than the MOV in the driver.

A certain amount of impedance between the primary SPD and the driver can be beneficial; perhaps a few microHenries will help ensure proper coordination. For example, a longer length of cable between the primary SPD and the driver may be sufficient due to the characteristic impedance of the wire. On the other hand, lead wires on the input side of the SPD should be minimized to prevent increased clamping voltage in the SPD module due to the characteristic impedance of those wires.

1 Although North American luminaire standards characterize immunity testing as a 10kV/10kA requirement, the test setup calls for a 2Ω source impedance, and it is actually a 20kV/10kA requirement.

The following steps summarize a design process that helps ensure enough inductance is present between the SPD MOVs and the one in the driver:

1. MOV1 and MOV2 need to be coordinated so that most of surge current/energy flows through MOV1.
2. Select MOVs with V_M of MOV1 ≤ V_M of MOV2, where V_M is the Maximum Continuous Operating Voltage.
3. Select MOVs with V_C of MOV1 ≤ V_C of MOV2, where V_C is the Maximum Clamping Voltage.
4. $V_{MOV1} = V_{MOV2} + L\ (di/dt)$
5. Inductance L may be added in series with the SPD. Increasing inductance L will result in better coordination as MOV1 absorbs the higher surge energy
6. Refer to the embedded links in the SPD blocks of ***Figure 17*** for MOV technical information. See the Littelfuse Varistor Ordering Information Diagram for details on constructing a part number.

The Littelfuse Application Team has years of expertise in such coordination requirements and has helped many customers optimize their circuit reliability while meeting surge immunity requirements.

Power Supply Unit Design Considerations (Fuse, Equivalent Resistance, TVS Diode)

Although an SPD module is designed to absorb most of the surge energy produced by a lightning strike, some residual energy can enter the LED driver and cause damage to the components inside it (***Figure 18***). To minimize the damage, always consider an LED driver design that works in cooperation with the SPD module so less energy can enter the LED driver.

Power Supply Unit Design Considerations (continued)

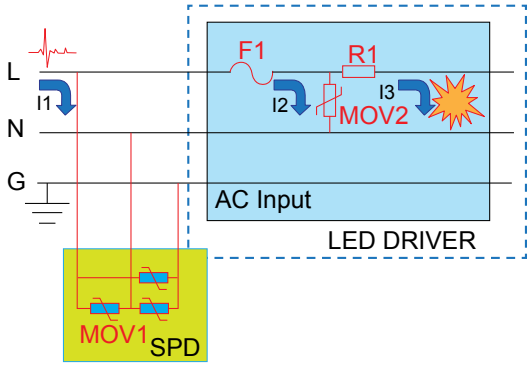

Figure 18. Residual voltage and current can damage an LED driver.

- **Residual Voltage**
  Determined by MOV1; therefore, a varistor with fast response time and low clamping voltage varistor is preferred.

- **Residual Current**
  The 8×20µs surge current waveform is calibrated to reach peak value (for example, 10kA) at the surge generator, before it is applied to the luminaire. When the surge current is discharged from the surge generator, it affects the SPD and power supply unit (PSU) at three major points.

  – **I1: The current flow through the SPD (This is major portion of the surge current.)**

  – **I2: The current flow through the MOV in the PSU**

  – **I3: The current flow through the primary circuit in the PSU**

  For MOV2, choose an MOV with a higher clamping voltage than the one used for MOV1 to maximize I1 and minimize I2 so that fuse F1 is not damaged by residual current.

  Fuse F1 should be also selected carefully, with a higher melting i^2t rating to withstand residual surge current I2+I3. Below fuses are recommended for F1 as they are tested to withstand 3kA surge current. In poor coordination between MOV1 and MOV2, I2+I3 may go as high as 30%. These fuses can withstand 3kA residual surge current to help the luminaire survive the 10kA surge event. Power supply unit thus has higher compatibility with different SPDs and MOV1.

Part Number	Package	Rating
8071630	9.2x6.4x12.4mm	6.3A 300V
219005	5x20mm	5A 250V
209007	4.5x14.5mm	7A 350V
477010	5x20mm	10A 500V

  R1, the equivalent resistance of the primary circuitry, including the NTC, EMI filter, rectifier, PFC, transformer, transistor, etc., could be adjusted higher if necessary in order to minimize I3 and component damage in the primary circuitry.

- **TVS diode as ultimate protector in LED driver**
  For components sensitive to and easily damaged by surge voltage or current, place TVS diodes in parallel with them to absorb "let-through" energy from the SPD module.

Wiring Guide

L-N-G type, select the model based on rated voltage (Line-to-Neutral) of the power source. The power source's rated voltage should NOT be higher than the surge protector operating voltage (i.e., 240VAC for Model LSP10240P).

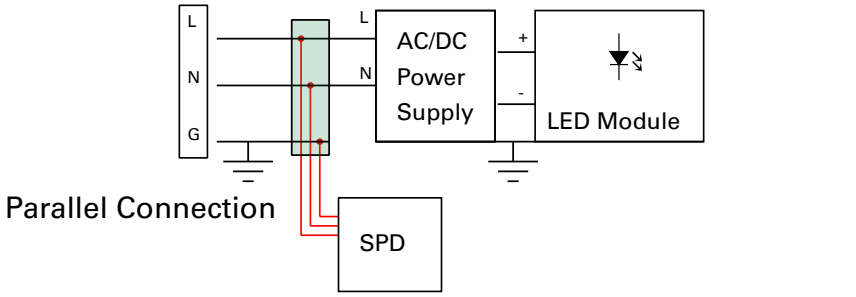

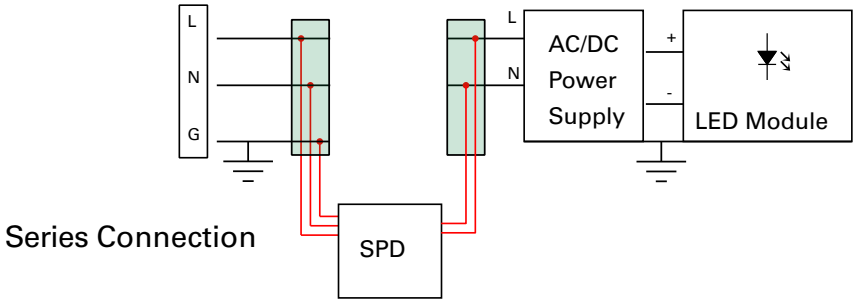

Wiring Guide (continued)

L-L-N/G type, Models LSP10240LLX and LSP480LLX are designed to be installed on standard 2-pole, 3-wire single-phase circuits rated 120/240VAC and 277/480VAC respectively. Do not connect them to other circuits.

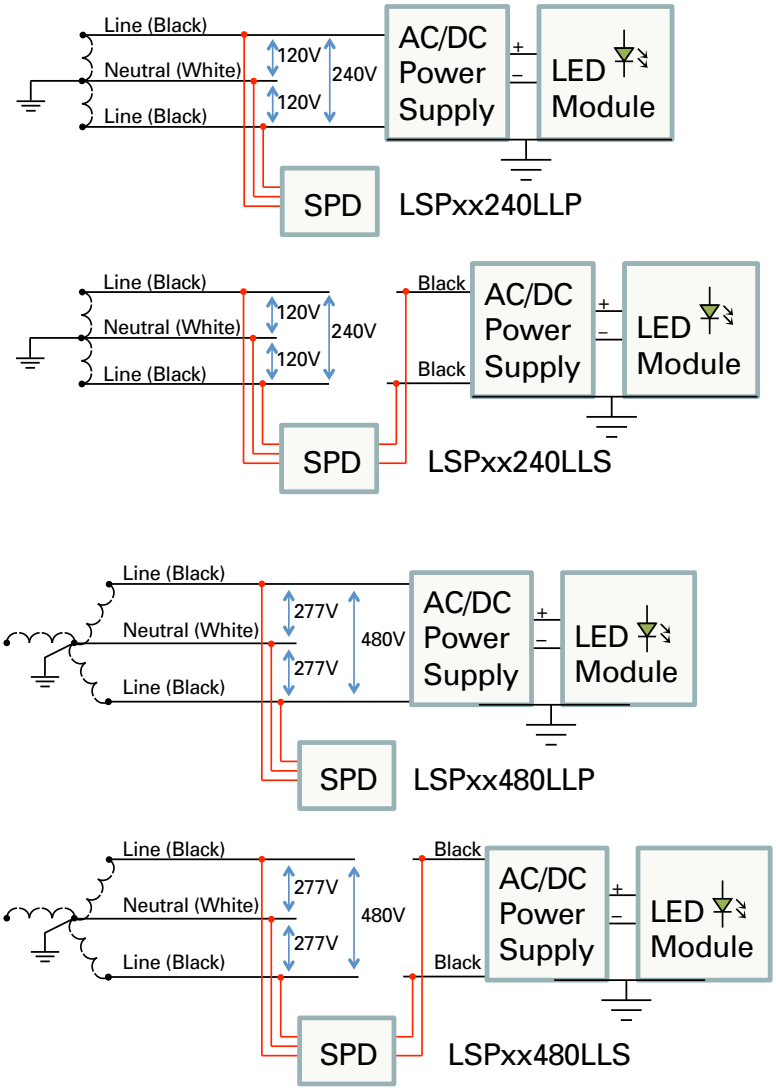

With IEC color wires (brown/blue) for Class II equipment

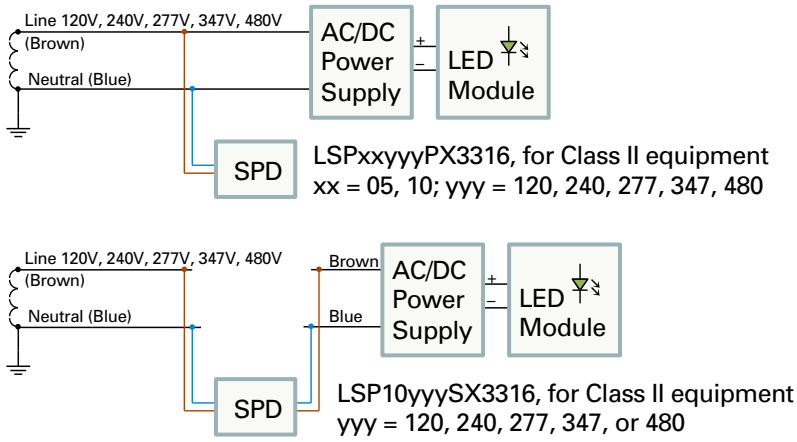

Ungrounded SPDs are suitable for Class II equipment.

Grounded SPDs are suitable for Class I equipment like:

1. Grounding wire comes with power wires from power distribution panel (TN network)
2. No grounding wire is provided; however, the pole has its own solid grounding to the soil. (TT network)

Installation Guide

- Caution—Risk of electric shock
- Caution—Installation and service must be performed by qualified personnel.
- Caution—Remove ALL electrical power before installation or service.
- Keep wires as straight as possible.
- Round wires rather than bending them at a hard 90 degree angle.
- Connect wires as shown in diagrams.
- Keep wires from the luminaire's terminal block to the AC/DC power supply as short as possible so that SPD is close to the AC/DC power supply.
- Do not cross/overlap protected wires (after SPD, AC or DC) with unprotected wires (before SPD, AC)
- Ensure electrical connections and mountings are correct before energizing the circuit.

Legal Disclaimers

Liability

Littelfuse, Inc. its affiliates, agents, and employees, and all persons acting on its or their behalf (collectively, "Littelfuse"), disclaim any and all liability for any errors, inaccuracies or incompleteness contained here or in any other disclosure relating to any product. Littelfuse disclaims any and all liability arising out of the use or application of any product described herein or of any information provided herein to the maximum extent permitted by law. The product specifications do not expand or otherwise modify Littelfuse terms and conditions of purchase, including but not limited to the warranty expressed therein, which apply to these products.

Right to Make Changes

Littelfuse reserves the right to make any and all changes to the products described herein without notice.

Not Intended for Use in Life Support or Life Saving Applications

The products shown herein are not designed for use in life sustaining or life saving applications unless otherwise expressly indicated. Customers using or selling Littelfuse products not expressly indicated for use in such applications do so entirely at their own risk and agree to fully indemnify Littelfuse for any damages arising or resulting from such use or sale. Please contact authorized Littelfuse personnel to obtain terms and conditions regarding products designed for such applications.

Intellectual Property

No license, express or implied, by estoppel or otherwise, to any intellectual property rights is granted by this document or by any conduct of Littelfuse. Product names and markings noted herein may be registered trademarks of their respective owners. Littelfuse makes no representations or warranties of non-infringement or misappropriation of any third party intellectual property rights unless specifically provided for herein.

Disclaimer

Specifications, descriptions and data contained in this document are believed to be accurate. However, users should independently evaluate each product for the particular application. Littelfuse reserves the right to change any information contained herein without notice and may, at its sole discretion, change the design, manufacture or construction of any product. Visit www.littelfuse.com for the most up-to-date information. Littelfuse's only obligations for any of its products are specified in its Standard Terms and Conditions and Littelfuse shall not be liable for any indirect, consequential or incidental damages from any sale or use of any of its products.

Littelfuse®

Expertise Applied | Answers Delivered

littelfuse.com
circuitprotection@littelfuse.com

EC132Nv0516